LIFTEK

AUTOMATIC 1500+ PALLET TRUCK

PARTS LIST



25248
LTA1500+
1500KG

CONTENTS

0101 Frame Assembly (S.N.before-Z332000000)
010101 FrameAssembly S.N.afterZ332000001-)
0102 Connecting Link Assembly (double wheel)
0103 Caster Assembly
0201 Driving System (1/2)
0202 Driving System (2/2)
0301 Operating Control System
0302 Control Pod Assembly
0303 Upper Cover Assembly
0401 Hydraulic System
0402 Lifting Cylinder
0403 Pump & Motor Assembly
0501 Electrical Assembly
0502 Controller Board Assembly
0503 Lithium Battery (S.N. before -Z321500017)
050301 Lithium Battery (S.N. after Z321500018-)
0504 Wiring Harness 1
0505 Wiring Harness 2
0506 Cable Assembly
0507 Charger Assembly
0901 Label
0902 Special Accessories

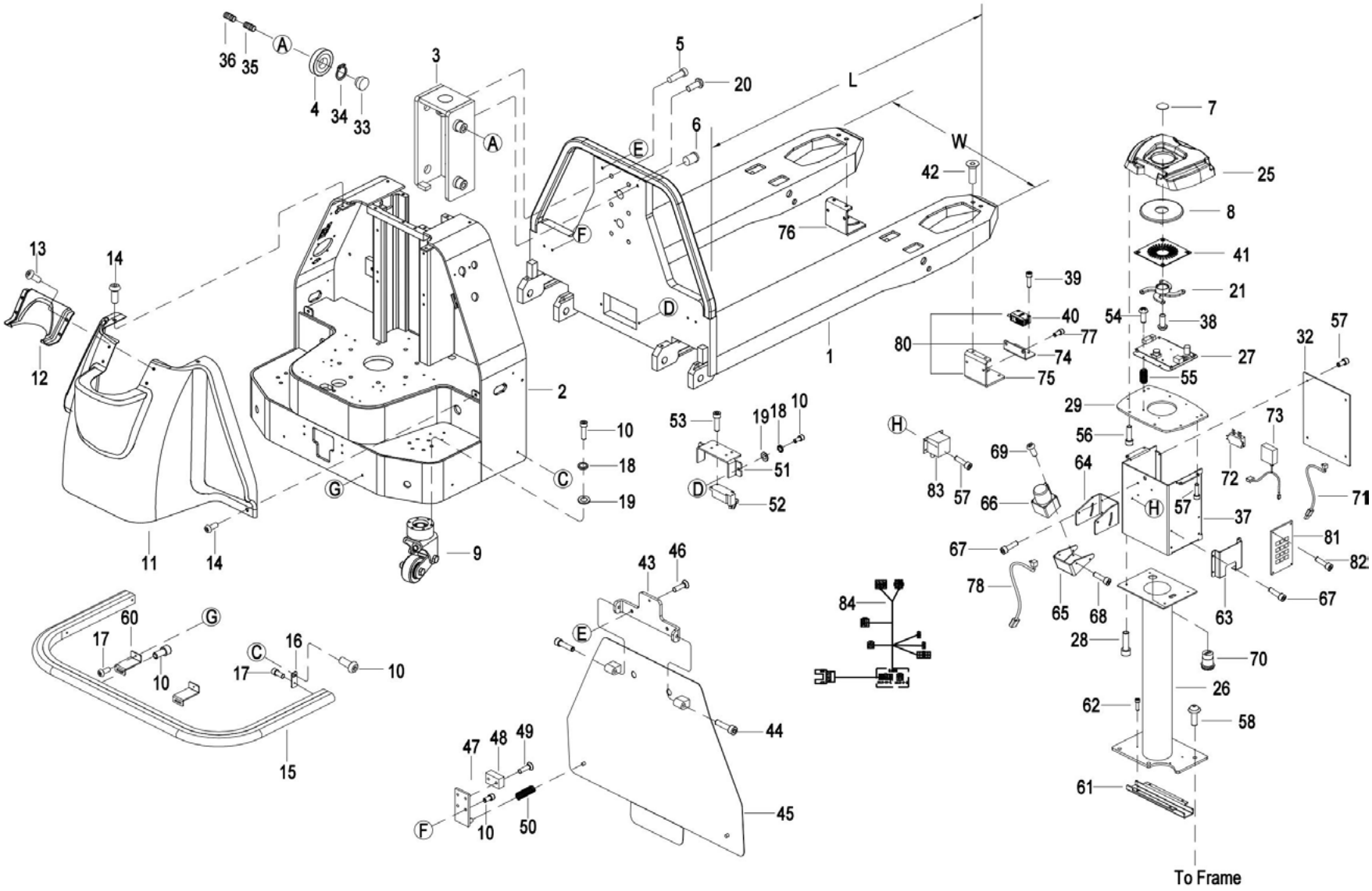

fig1220002100

0101 Frame Assembly (S.N.before-Z332000000)

1	8011-110000-00	Front Frame	1		W=600mm
1	8011-110000-00-01	Front frame	1	Before Z321300037	W=540mm
1	8011-110000-01	Front Frame	1		W=685mm
1	8011-110000-E0	Front Frame	1	After Z321300037	
2	8011-120000-00	Rear frame	1		
3	8011-130000-00	turning rolls	1		
4	1600-600010-00	Roller	4		
5	302001000064	Screw M10×30	6		
6	8011-000015-00	locating shaft	2		
7	8011-411054-G0	Transparent sheet	1		
8	8011-411053-G0	Transparent cover	1		
9	1155-032000-00	Caster Assembly	2		See 0103
10	302001000107	Flatwasher	27		
11	8011-500002-00	face mask	1		
12	8011-500003-00	mask cover	1		
13	302002000011	Screw M6*16	4		
14	503000000202	Screw M8x20	4		
15	8011-721002-G1	Safety Bumper	1	Before Z332000001	
15	8011-721002-G3	Safety Bumper	1	After Z332000001	
16	8011-000002-00	Anti-collision strip mounting plate	2		
17	302001000049	Screw M4*8	6		
18	304003000004	Flat washer ø6	12		
19	304002000004	Lockwasher ø6	12		
20	302000000343	Screw M6*12	2		
21	8011-411052-G0	Isolator	1		
22	302002000021	Screw M4*12	3		
23	304003000002	Flatwasher	3		
24	304002000002	Flatwasher ø4	3		
25	8011-411051-G0	Camera cover	1		
26	8011-411000-G1	Mast weldment	1		H=500
26	8011-413000-G2	High Mast	1	Z331600071-	Optional,H=1200
27	8011-420000-G0	control panel	1		

27	8011-420000-G0-01	control panel	1		Optional,With WIFI
28	202800000003	Screw M5*12	4		
29	8011-411003-G1	Upper mast	1		
30	302002000003	Screw M4*8	3		
31	303001000002	NutM4	3		
32	8011-411005-G0	Hardware backplane	1		
33	1221-010007-P0	Block	4		
34	305001000007	Retainer Ring ø30	4		
35	302005000004	Screw M12*20	4		
36	302005000003	Screw M12X10	4		
37	8011-411014-G1	Hardware box	1		
38	302000000597	Screw ST3*10	4		
39	302001000048	Screw M3*8 Dacromet-8.8	8		
40	8011-500036-00	Photoelectric Sensors	4		
41	8011-420054-G0	LED lamp board	1		
42	302003000017	Screw M5x10	4		
43	8011-000029-10	Plate mounting seat	1		
44	302001000036	Screw M10×40	2		
45	8011-150000-10	Collision welding piece	1		
46	302000000472	Screw M8*16	2		
47	8011-000028-10	Spring mounting seat	2		
48	2125-600005-00	Cushioning rubber block	2		
49	302003000005	Screw M6×20	4		
50	8011-500037-00	spring	2		
51	8011-000027-10	Impact plate fretting mounting plate	1		
52	2125-500002-00	Microswitch	1		
53	302000000617	Screw M5*12	4	After Z321500040	
53	302001000053	Screw M5*12	4	Before Z321500040	
54	302000000198	Screw M4x20	4		
55	8011-411055-G0	spring	4		
56	302000000617	Screw M5*12	8	After Z321500040	
56	302001000053	Screw M5*12	8	Before Z321500040	
57	302001000121	ScrewM4x6	8		

58	302000000221	Screw M8*20 Dacromet-8.8	4		
60	8011-721001-G1	Front bracket of anti-collision strip	2		
61	8011-000031-00	Trough plate bending	1		
62	302001000006	Screw M4*10 Dacromet-8.8	4		
63	8011-411015-G0	Pocket	1		
64	8011-711011-G0	Laser upper adjusting plate	1		
65	8011-711010-G0	Upper laser mounting plate	1		
66	8011-711101-G0	LIDAR	1		
67	202800000016	Screw M4×10	8		
68	202800000003	Screw M5*12	4		
69	302000000169	Screw M3×6	4		
70	8011-900201-G0	USB adapter	1		
71	8011-900202-G0	Usb cable	1		
72	8011-900203-G0	Pressure conversion module	1		
73	8011-900204-G0	Mobile phone power supply line and receiver	1		
74	8011-000103-G0	Double photoelectric mounting sub-board	2		
75	8011-000101-G0	Dual photoelectric mounting mainboard	1	Before Z321500018	
75	8011-000101-GA	Install the motherboard	1	After Z321500018	
76	8011-000101-GA	Install the motherboard	1	After Z321500018	
76	8011-000102-G0	Symmetrical piece of dual photoelectric mounting mainboard	1	Before Z321500018	
77	302001000012	Screw M5*10 Dacromet-8.8	4	-Z321500017	
77.1	202800000016	Screw M4×10	4	Z321500018-	
78	8011-900206-G0	Upper radar line	1		
79	3112-100033-10	Static chain	1		
80	8011-00011X-G0	Dual photomodule	1	Before Z321500018	Left
80	8011-00011X-GA	Dual photomodule	1	After Z321500018	
80	8011-00011X-GA	Dual photomodule	1	After Z321500018	

80	8011-00012X-G0	Dual optoelectronic component symmetry	1	Before Z321500018	Right
81	8011-900401-G0	Button Keyboard	1	After Z321500040	
81	8011-900402-G0	Button Keyboard Cover	1	After Z321300037- Before Z321500040	
82	302000000617	Screw M5*12	4	After Z321500040	
82	302001000053	Screw M5*12	4	Before Z321500040	Superseded by 302000000617
83	8011-904005-G0	gyros	1	Z331400107-	Optional
84	8011-520006-00	Mast Harness	1	After Z341200042	
84	8011-520008-00	High Mast Harness (1200)	1	Z331600071-	H=1200
84	8011-520008-00	High Mast Harness (1200)	1	After Z341200042	
84	8011-900015-G0	Mast Harness (500)	1	After Z331600071- Before Z341200042	For 8011-411000-G1,H=500
84	8011-900016-G0	High Mast Harness (1200)	1	Before Z341200042	8011-413000-G2,H=1200

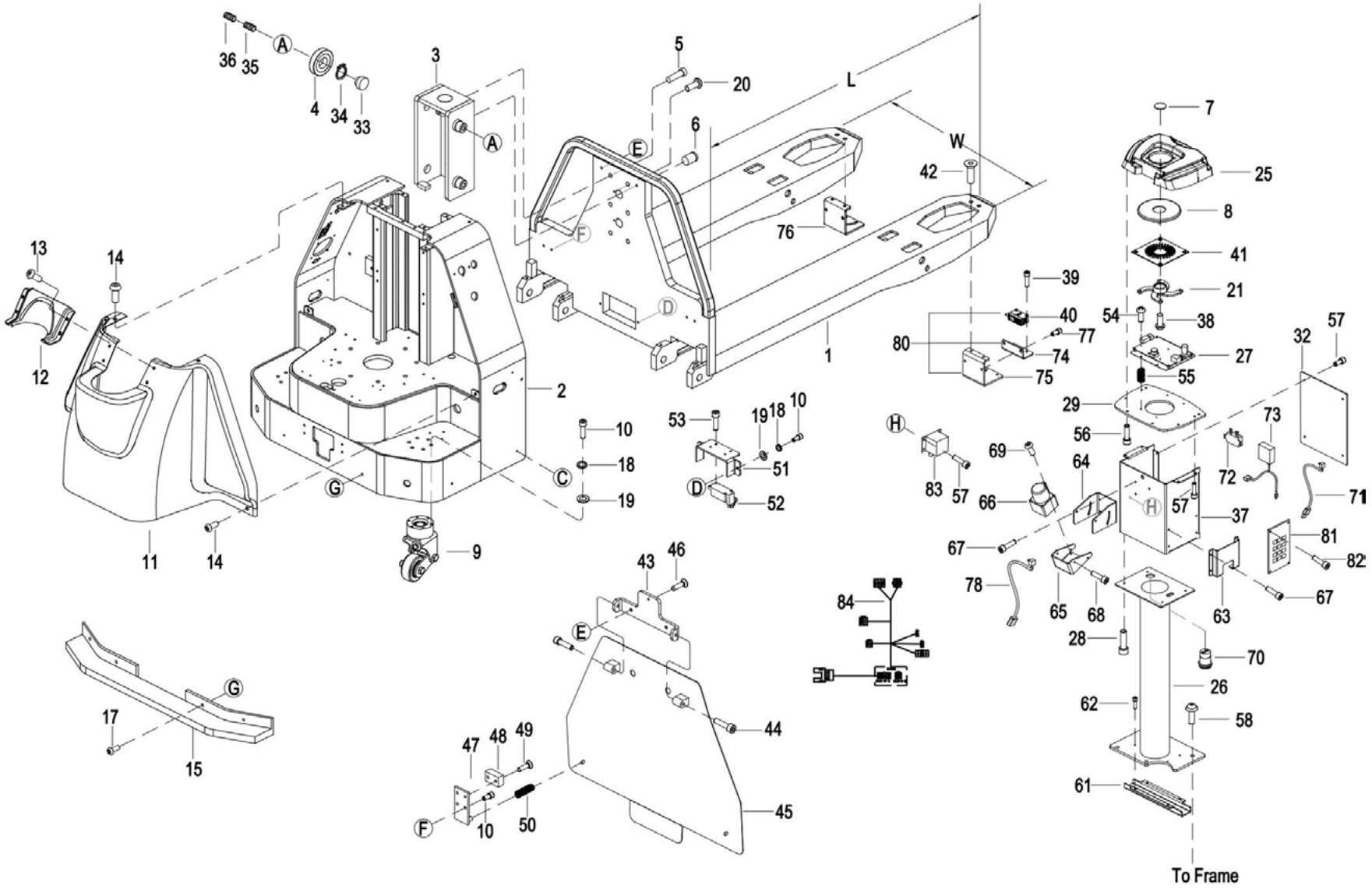

fig1220002101

010101 Frame Assembly (S.N.afterZ332000001-)

1	8011-110000-00	Front Frame	1		W=600mm
1	8011-110000-01	Front Frame	1		W=685mm
1	8011-110000-E0	Front Frame	1		W=540mm
2	8011-120000-00	Rear frame	1		
3	8011-130000-00	turning rolls	1		
4	1600-600010-00	Roller	4		
5	302001000064	Screw M10×30	6		
6	8011-000015-00	locating shaft	2		
7	8011-411054-G0	Transparent sheet	1		
8	8011-411053-G0	Transparent cover	1		
9	1155-032000-00	Caster Assembly	2		See 0103
10	302001000107	Flatwasher	27		
11	8011-500002-00	face mask	1		
12	8011-500003-00	mask cover	1		
13	302002000011	Screw M6*16	4		
14	503000000202	Screw M8x20	4		
15	8011-721002-G3	Safety Bumper	1		
16	8011-000002-00	Anti-collision strip mounting plate	2		
17	301000000567	Bolt M6×12	4		
18	304003000004	Flat washer ø6	12		
19	304002000004	Lockwasher ø6	12		
20	302000000343	Screw M6*12	2		
21	8011-411052-G0	Isolator	1		
22	302002000021	Screw M4*12	3		
23	304003000002	Flatwasher	3		
24	304002000002	Flatwasher ø4	3		
25	8011-411051-G0	Camera cover	1		
26	8011-411000-G1	Mast weldment	1		H=500
26	8011-413000-G2	High Mast	1		Optional,H=1200
27	8011-420000-G0	control panel	1		
27	8011-420000-G0-01	control panel	1		Optional,with WIFI

28	202800000003	Screw M5*12	4		
29	8011-411003-G1	Upper mast	1		
30	302002000003	Screw M4*8	3		
31	303001000002	NutM4	3		
32	8011-411005-G0	Hardware backplane	1		
33	1221-010007-P0	Block	4		
34	305001000007	Retainer Ring ø30	4		
35	302005000004	Screw M12*20	4		
36	302005000003	Screw M12X10	4		
37	8011-411014-G1	Hardware box	1		
38	302000000597	Screw ST3*10	4		
39	302001000048	Screw M3*8 Dacromet-8.8	8		
40	8011-500036-00	Photoelectric Sensors	4		
41	8011-420054-G0	LED lamp board	1		
42	302003000017	Screw M5x10	4		
43	8011-000029-10	Plate mounting seat	1		
44	302001000036	Screw M10×40	2		
45	8011-150000-10	Collision welding piece	1		
46	302000000472	Screw M8*16	2		
47	8011-000028-10	Spring mounting seat	2		
48	2125-600005-00	Cushioning rubber block	2		
49	302003000005	Screw M6×20	4		
50	8011-500037-00	spring	2		
51	8011-000027-10	Impact plate fretting mounting plate	1		
52	2125-500002-00	Microswitch	1		
53	302000000617	Screw M5*12	4		
54	302000000198	Screw M4x20	4		
55	8011-411055-G0	spring	4		
56	302000000617	Screw M5*12	8		
57	302001000121	ScrewM4x6	8		
58	302000000221	Screw M8*20 Dacromet-8.8	4		
60	8011-721001-G1	Front bracket of anti-collision strip	2		
61	8011-000031-00	Trough plate bending	1		

62	302001000006	Screw M4*10 Dacromet-8.8	4		
63	8011-411015-G0	Pocket	1		
64	8011-711011-G0	Laser upper adjusting plate	1		
65	8011-711010-G0	Upper laser mounting plate	1		
66	8011-711101-G0	LIDAR	1		
67	202800000016	Screw M4×10	8		
68	202800000003	Screw M5*12	4		
69	302000000169	Screw M3×6	4		
70	8011-900201-G0	USB adapter	1		
71	8011-900202-G0	Usb cable	1		
72	8011-900203-G0	Pressure conversion module	1		
73	8011-900204-G0	Mobile phone power supply line and receiver	1		
74	8011-000103-G0	Double photoelectric mounting sub-board	2		
75	8011-000101-GA	Install the motherboard	1		
76	8011-000101-GA	Install the motherboard	1		
77	202800000016	Screw M4×10	4		
78	8011-900206-G0	Upper radar line	1		
79	3112-100033-10	Static chain	1		
80	8011-00011X-GA	Dual photomodule	2		
81	8011-900401-G0	Button Keyboard	1		
82	302000000617	Screw M5*12	4		
83	8011-904005-G0	gyros	1		
84	8011-520006-00	Mast Harness	1	After Z341200042	
84	8011-520008-00	High Mast Harness (1200)	1	After Z341200042	
84	8011-900015-G0	Mast Harness (500)	1	Before Z341200042	
84	8011-900016-G0	High Mast Harness (1200)	1	Before Z341200042	

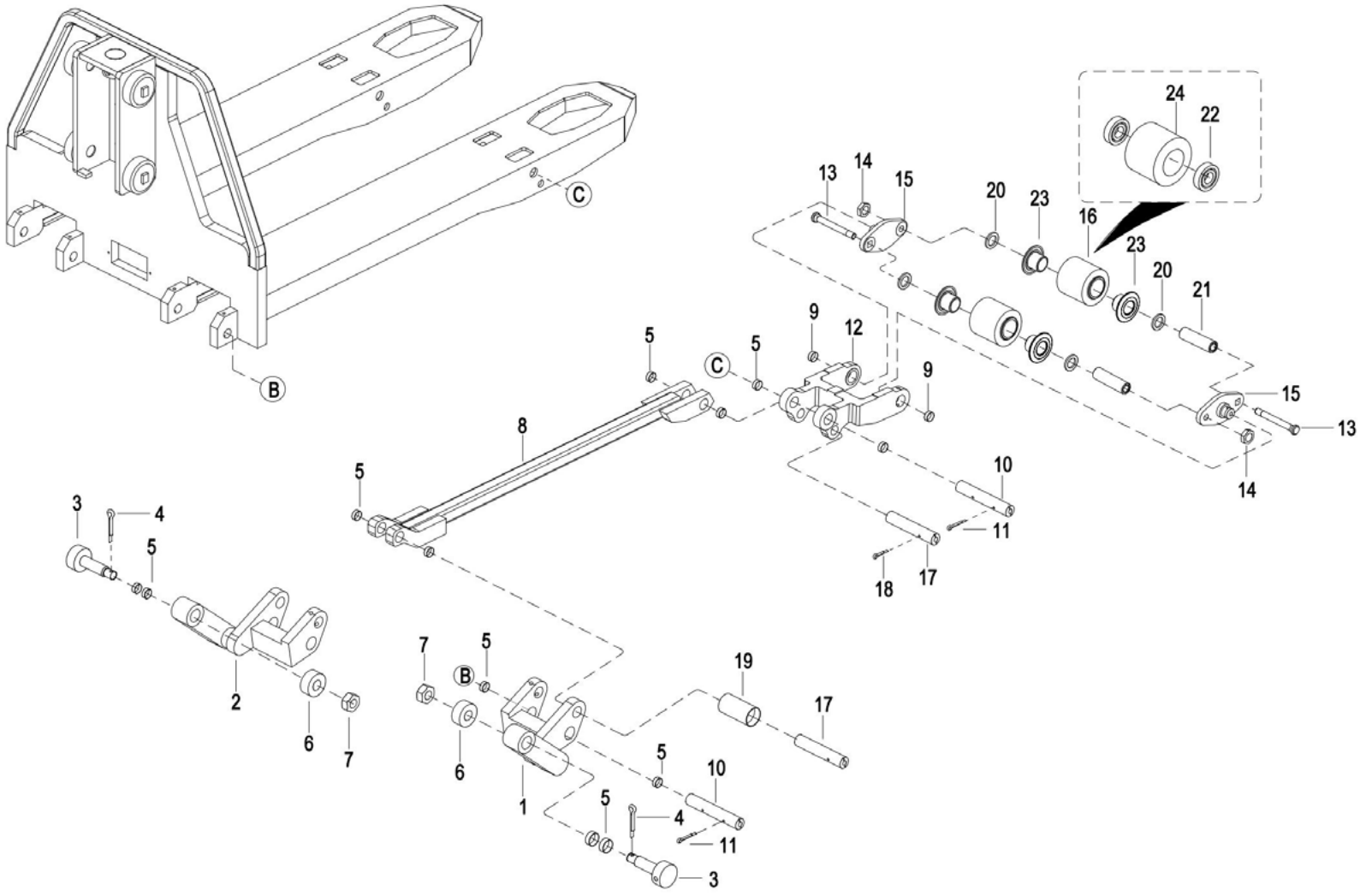

fig1280000600

0102 Connecting Link Assembly(double wheel)

1	8011-000003-00	Lower Link I	1		W=685/600
1	8011-220000-01	Lower connecting rod I	1		W=540mm
2	8011-000004-00	Lower Link II	1		W=685/600
2	8011-230000-01	Lower connecting rod II	1		W=540mm
3	2110-640005-0A	Shaft	2		
4	0000-000476-00	Cotter pins ø2.5×40	2		
5	1221-130001-P0	Shaft sleeve 20*23*18	14		
6	2110-640006-00	Roller	2		
7	303001000010	Nut M18	2		
8	8011-210000-00	Long connecting rod weldment	2		
9	1221-130021-00	Shaft sleeve 22*25*15F	4		
10	1221-130002-PA	Shaft	4		
11	307004000001	Round Pin ø4×35	4		
12	1120-130008-1C	Wheel Bracket	2		
13	1120-130009-00	Bolt	4		
14	0000-000496-00	Nut M12*1.25	4		
15	1120-130011-00	Plate	4		
16	1120-800001-ZC	Load Wheel(With bearings,PU ϕ85*70)	4		With bearing
17	1221-130003-P0	Shaft	4		
18	307004000007	Pin ø6X16	4		
19	1221-130002-E0	Sleeve	2		
20	0000-000435-00	Flatwasher ø20	8		
21	1120-133001-00	Shaft	4		
22	309001000007	Bearing 6205-2RS-C3	8		
23	1120-133002-AA	Dust cover (with 6205 bearing)\	2		
24	1120-133001-AA-02	Load Wheel (Without bearings,PU ϕ85*70)	4		

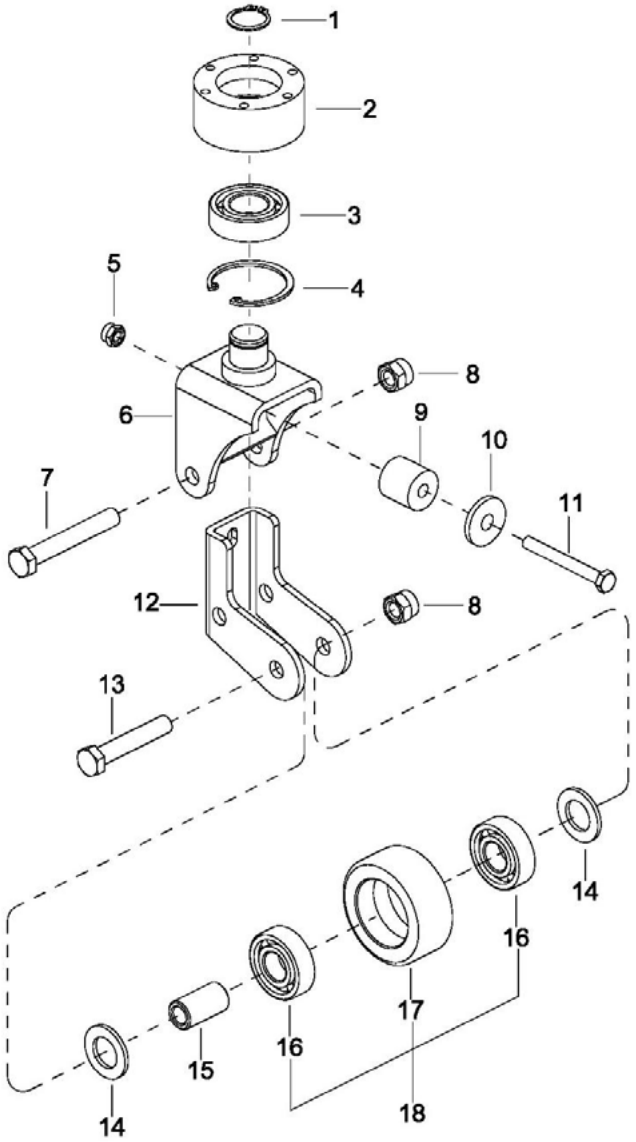

fig1230000500

0103 Caster Assembly

1	305001000004	Collar ø25	1		
2	1155-032100-00	Caster Support	1		
3	309001000007	Bearing 6205-2RS-C3	1		
4	305002000003	Snap Ring For Hole ø52	1		
5	303022000004	Nut M8	1		
6	1155-032300-00	Rotating Frame	1		
7	301000000109	Bolt M12*80	1		
8	303007000002	Nut M10	2		
9	1115-032003-00	Buffer block ϕ28*26.5	1		
10	304002000007	Flat Washer ø12	1		
11	301001000090	Bolt M8*70	1		
12	1155-032201-00	Wheel Support	1		
13	301000000442	Bolt M12×65	1		
14	304002000011	Washer ø20	2		
15	1155-143001-00	Pin shaft ϕ20*38	1		
16	309001000023	Bearing 6204-2RS-C3	2		
17	1155-172101-00	Caster Wheel(Without bearings,PU ϕ74*30)	1		
18	1155-17211X-00	Caster Wheel(With bearings,PU ϕ74*30)	1		With Bearing

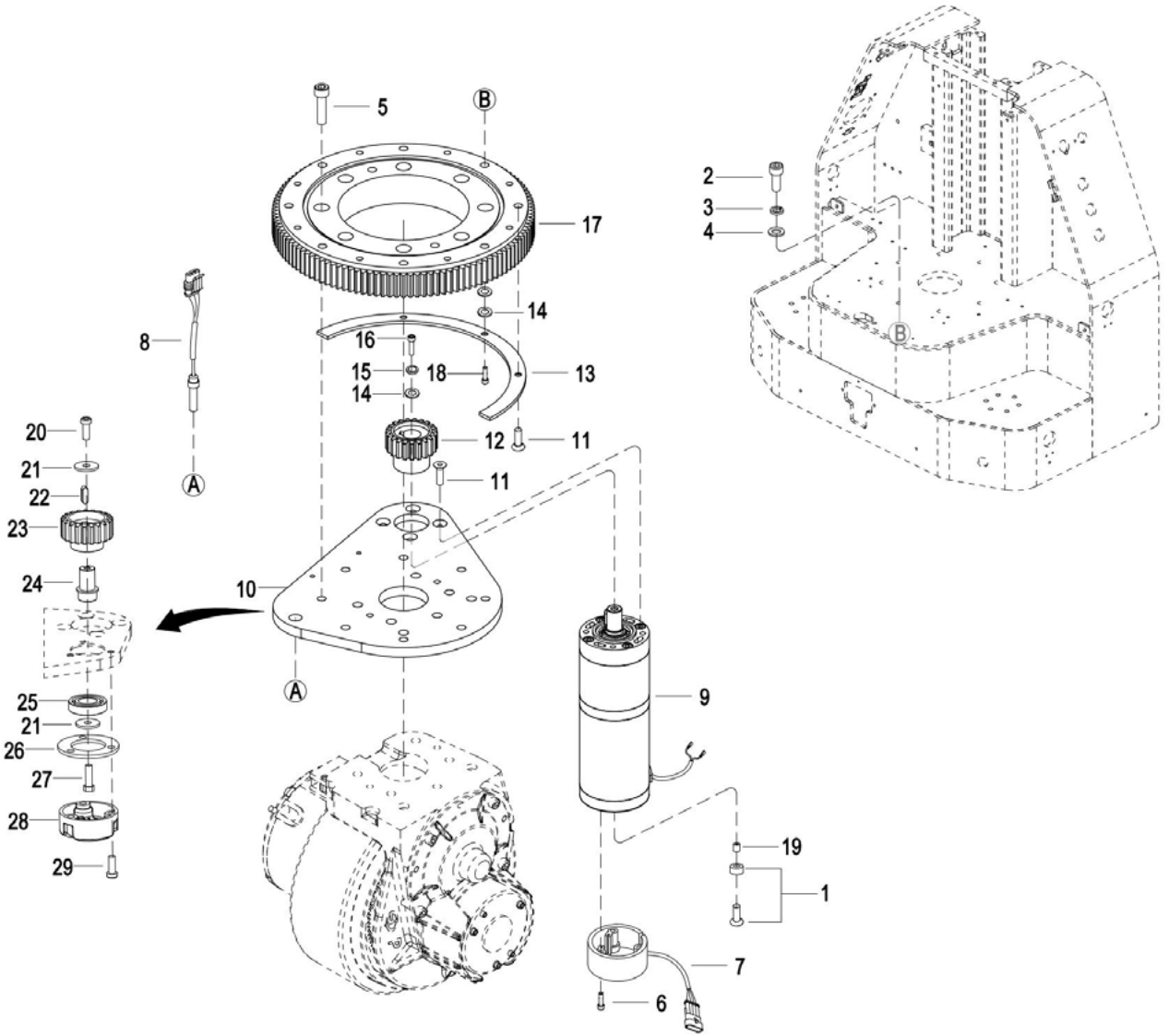

fig3210002001

0201 Driving System(1/2)

1	1221-202000-00	Magnet Assembly	1		
2	302000000301	Screw M8*35	8		
3	0000-000159-00	Flatwasher ø8	8		
4	0000-000194-00	Flatwasher ø8	8		
5	302000000307	Screw M12*30	8		
6	0000-000208-00	Screw M4*25	3		
7	3712-403000-00	Encoder	1		
8	1223-520009-00	Proximity switch harness	1		
9	ZL10-250000-XM	Steering Motor	1		
10	ZL10-2600000-G1	Mounting Plate	1	After Z321500018	
10	ZL10-260000-XM	Mounting plate horizontal AGV	1	Before Z321500018	
11	302000000396	Screw M6*16 Dacromet-8.8	5		
12	ZL10-270000-XM	Steering pinion horizontal AGV/m=2, Z=21	1		
13	ZL10-230000-XM	sensor bar	1		
14	304000000036	Flatwasher ø6	3		
15	0000-000056-00	Lockwasher Φ6	1		
16	301000000061	Bolt M6*20	1		
17	ZL10-280000-XM	Lifting motor	1		
18	302001000107	Flatwasher	1		
19	1221-200010-00	Copper Bush	1		
20	302000000343	Screw M6*12	1	Z321500032	
21	304000000061	Flatwasher ϕ6	2	Z321500032	
22	308001000002	Flat Key5×5×9	1	Z321500032	
23	ZL10-270000-XM	Steering pinion horizontal AGV/m=2, Z=21	1	Z321500032	
24	8011-200102-G0	Gear Shaft	1	Z321500032	
25	309000000115	Bearing 16003	1	Z321500032	
26	8011-200101-G0	Base Plate	1	Z321500032	
27	3218-900002-00	Bolt M6×14	1	Z321500032	
28	2219-200006-00	Encoder	1	Z321500032	
29	302002000011	Screw M6*16	3	Z321500032	

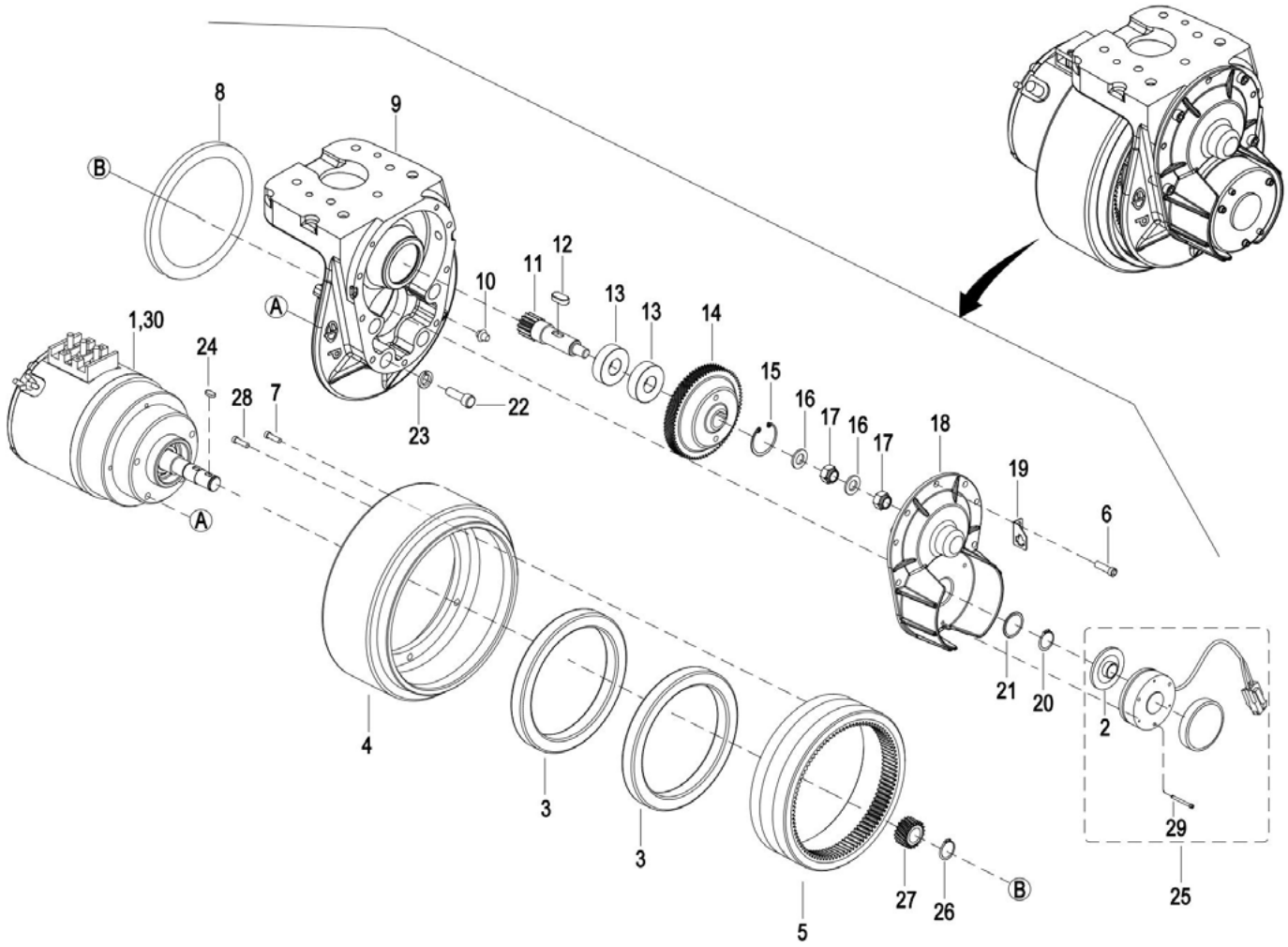

fig3210002100

0202 Driving System

0	ZL10-200000-M1	Driving Assembly	1		
1	ZL10-220000-40	Driving Motor	1		
2	1115-240001-00	Brake lining	1		
3	309001000011	Bearing 61824-2RS	2		
4	ZL10-210000-01	Driving Wheel(PU ϕ210*94)	1		
5	ZL10-200004-00	Internal ring gear	1		Replaced with item 11 together
6	0000-000055-00	Screw M6×16	1		
7	1115-200022-D0	Reformed screw	6		
8	306004000002	Rotary shaft lip seal ring 155*173*10	1		
9	ZL10-200005-00	Gear Case	1		
10	310000000002	CapM8*1	1		
11	ZL10-200003-00	Small Straight Teeth	1		Replaced with item 5 together
12	308001000002	Flat Key5×5×9	1		
13	309001000042	Bearing 6203RS	2		
14	ZL10-200001-00	Large Helical Teeth	1		Replaced with item 27 together
15	305002000023	Hole card Φ40	1		
16	304000000035	Flatwasher ø10	2		
17	303000000017	Nut M10*1.25	2		
18	ZL10-200006-A0	Cover	1		
19	1115-200020-00	Plate	1		
20	305006000001	Circlips for shaft ϕ15	1		
21	306004000001	Rotary shaft lip seal ring 16*28*7	1		
22	0000-000026-00	Screw M8×30	4		
23	304003000005	Lock washer ø8	6		
24	308001000001	Key 5×5×10	2		
25	1115-520012-20	Brake Assembly	1		
26	305001000002	Circlips for shaft	1		
27	ZL10-200002-00	Small Helical Teeth	1		Replaced with item 14 together
28	302001000018	Screw	3		
29	302000000153	Screw M4*45	3		
30	ZK12-22000X-01	Driving Encoder	1		

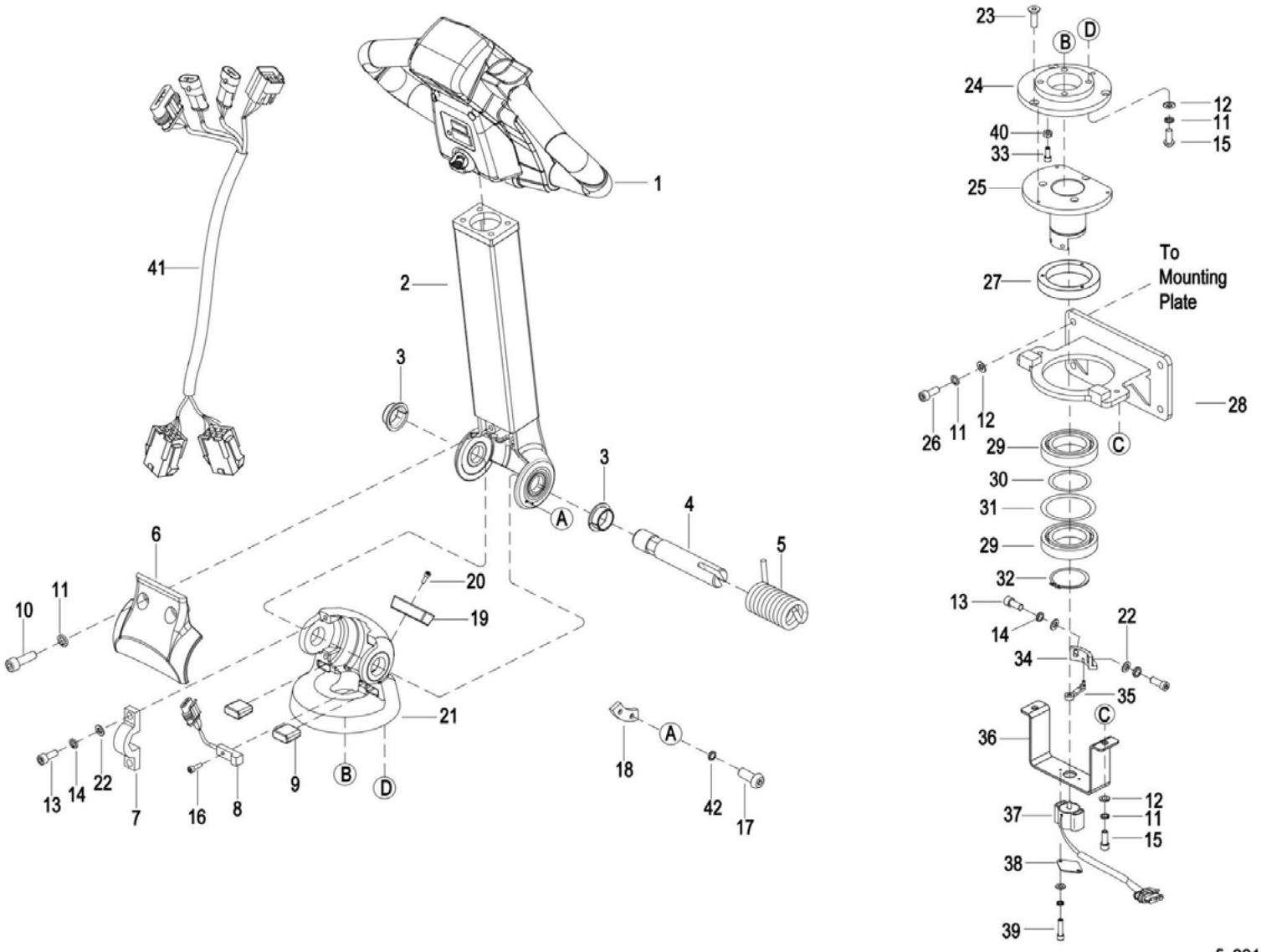

fig2210002200

0301 Operating Control System

1	1115-340000-10-92	Control Pod Assembly	1	After Z321500018	
1	1216-340000-20-B	Control Pod Assembly	1	Before Z321500018	See 0302
2	8011-320000-00	Handle pipe weldment	1		
3	202801900035	Bearing	2		
4	1226-300001-00	Pin shaft ϕ20*117	1		
5	1226-300004-00	Spring	1		
6	1226-300007-00	Cover	1		
7	1226-300002-00	Plate	1		
8	1226-520006-00	Induction Switch	1		
9	1226-300006-00	Cushion	2		
10	202800000109	Screw M8*25	2		
11	0000-000159-00	Flatwasher ø8	12		
12	0000-000176-00	Flatwasher M8	10		
13	0000-000055-00	Screw M6×16	4		
14	0000-000056-00	Lockwasher Φ6	2		
15	302001000106	Screw M8*16	6		
16	0000-001024-00	Screw M3*10	1		
17	302002000004	Screw M4*10	2		
18	1226-300005-00	Induction Plate	1		
19	1127-300002-0A	Buffer Block	1		
20	0000-000004-00	Screw M5×12	1		
21	1226-330000-00	Bracket	1		
22	304002000004	Lockwasher ø6	4		
23	302003000005	Screw M6×20	3		
24	8011-000011-00	Transition plate	1		
25	8011-330000-00	Curved joint weldment	1		
26	302001000106	Screw M8*16	4		
27	1216-300002-3B	Damping Steering Box	1		
28	8011-310000-00	Bearing seat weldment	1		
29	309001000004	Bearing 6011-2Z	2		
30	1216-300004-30	Flatwasher 65*56*1	1		
31	1625-300001-00	Flatwasher ϕ89*ϕ80*1	1		

34	1221-300006-00	Turntable	1		
35	1221-300003-00	Rocker Potentionmeter	1		
36	8011-000010-00	Potentiometer mounting plate	1		
37	1221-520007-2A	Potentionmeter	1		
38	1221-300004-00	Plate	1		
39	202800000390	Screw M4*40	2		
40	303000000012	Nut M8	1		
41	1221-520002-X0	Wire Harness	1	After Z321500032 Before Z341200042	
41	1221-530108-W0	Bent pipe bundle	1	Before Z321500032	
41	8011-520001-00	Wire Harness	1	After Z341200042	
42	0000-000122-00	Flatwasher ø4	2		

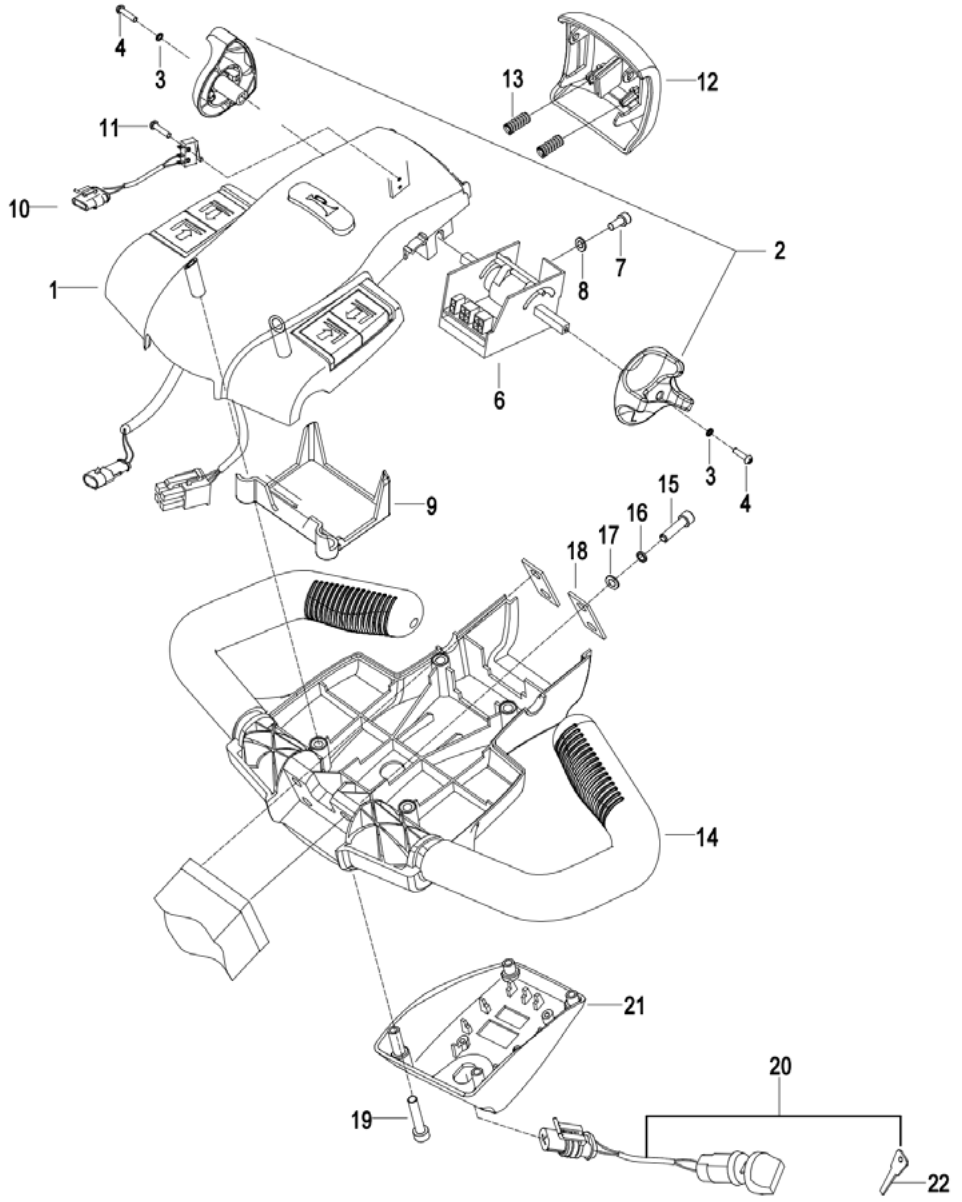

fig2220002205

1	1216-341000-20-B	Cap Assembly	1		With Wire,See 0303
2	1115-34001X-00	knob	1		
3	0000-000038-00	Flatwasher ϕ3	2		
4	0000-000037-00	Screw M3*12	2		
6	1115-510011-00	Accelerator Assembly	1	After Z321500032	
6	2YL012250882	Accelerator Assembly	1	Before Z321500032	
7	0000-000323-00	Screw	1		
8	0000-000390-00	Flatwasher ø5	1		
9	1115-340007-00	Wire Harness Cover	1		
10	1120-520009-00	Reversing Switch Wire	1		
11	0000-000989-00	Screw	2		
12	1115-340003-00	Cover	1		
13	1121-310004-00	Spring	2		
14	1115-340002-10	Cover	1		
15	0000-000322-00	Screw	4		
16	0000-000159-00	Flatwasher ø8	4		
17	0000-000176-00	Flatwasher M8	4		
18	1115-340001-00	Washer	2		
19	0000-001322-00	Screw M5*50	4		
20	1220-520002-00	Power Switch Assembly	1	Before Z321500032	
20	1220-520002-0C	2-Way Key Switch Assembly	1	After Z321500032	
21	1114-310001-20	Bottom Cover	1		
22	1115-500016-00	2 Way Switch Key	1		

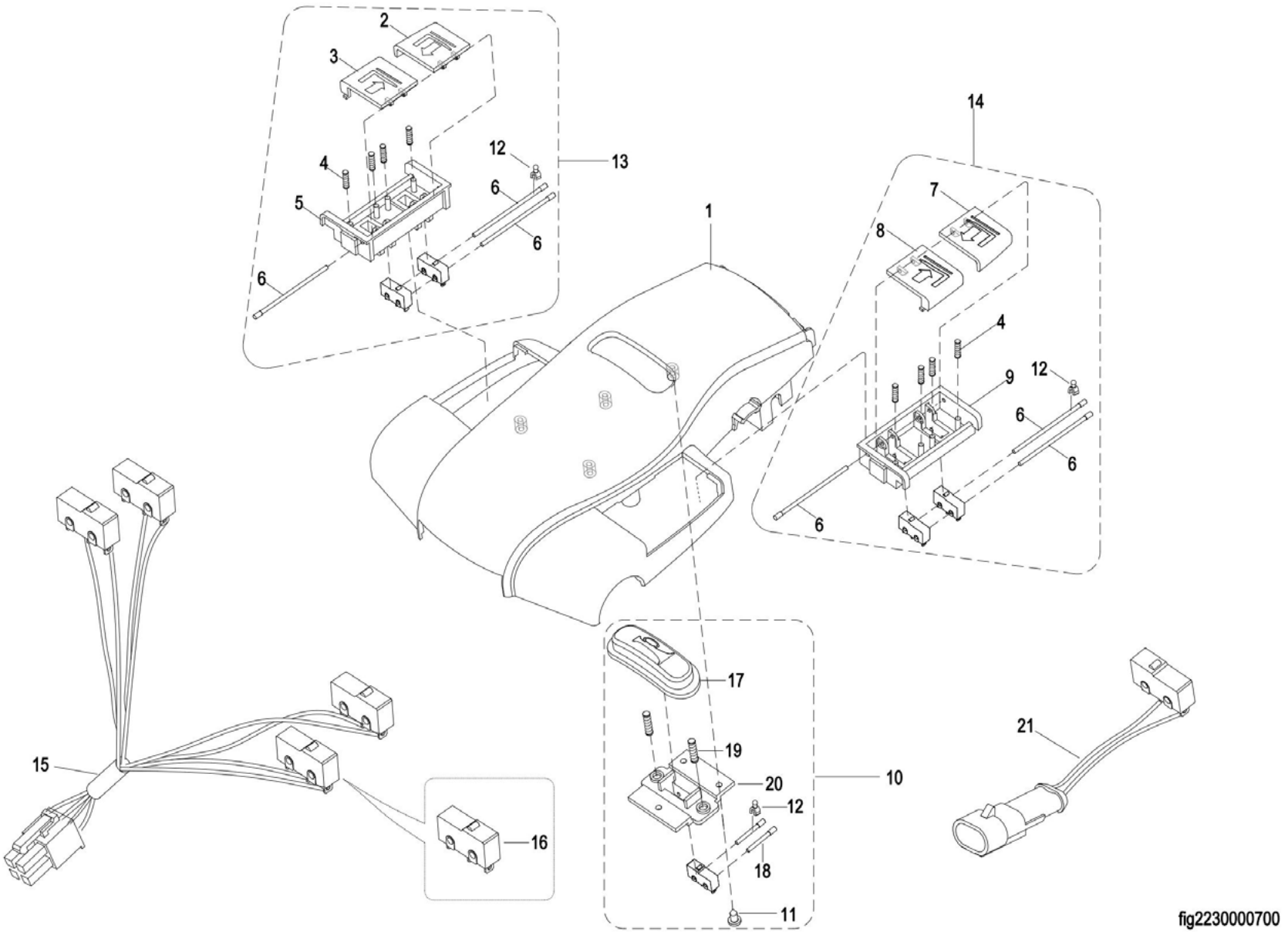

fig2230000700

0303 Upper Cover Assembly

1	1115-341001-00	Upper Cover	1		
2	1120-342203-00	Button For Lifting(R)	1		
3	1120-342202-00	Button For Lowering(R)	1		
4	1120-342102-00	Spring	8		
5	1120-342201-00	Button Bracket(R)	1		
6	1120-342105-00	Pin	6		
7	1120-342104-00	Button For Lifting(L)	1		
8	1120-342103-00	Button For Lowering(L)	1		
9	1120-342101-00	Button Bracket (L)	1		
10	1120-342300-00	Horn Button Assembly	1		
11	0000-000039-00	ScrewST3.9*9.5	3		
12	1120-342005-00-KT	Plastic sleeve	6		
13	1120-342200-00	Lift And Lower Box(R) Assembly	1		
14	1120-342100-00	Lift And Lower Box(L) Assembly	1		
15	1120-520005-00	Switch Wire Harness	1	After Z321500032	
15	1220-520006-0D	Buttons Assembly	1	Before Z321500032	
16	1220-560002-00	Inching Switch II	5		
17	1120-342002-00	Horn Button	1		
18	1120-342005-00	Pin	2		
19	1120-342003-00	Spring	2		
20	1120-342004-00	Button Bracket	1		
21	4230-520004-00	Horn Button	1	Z321500032-	

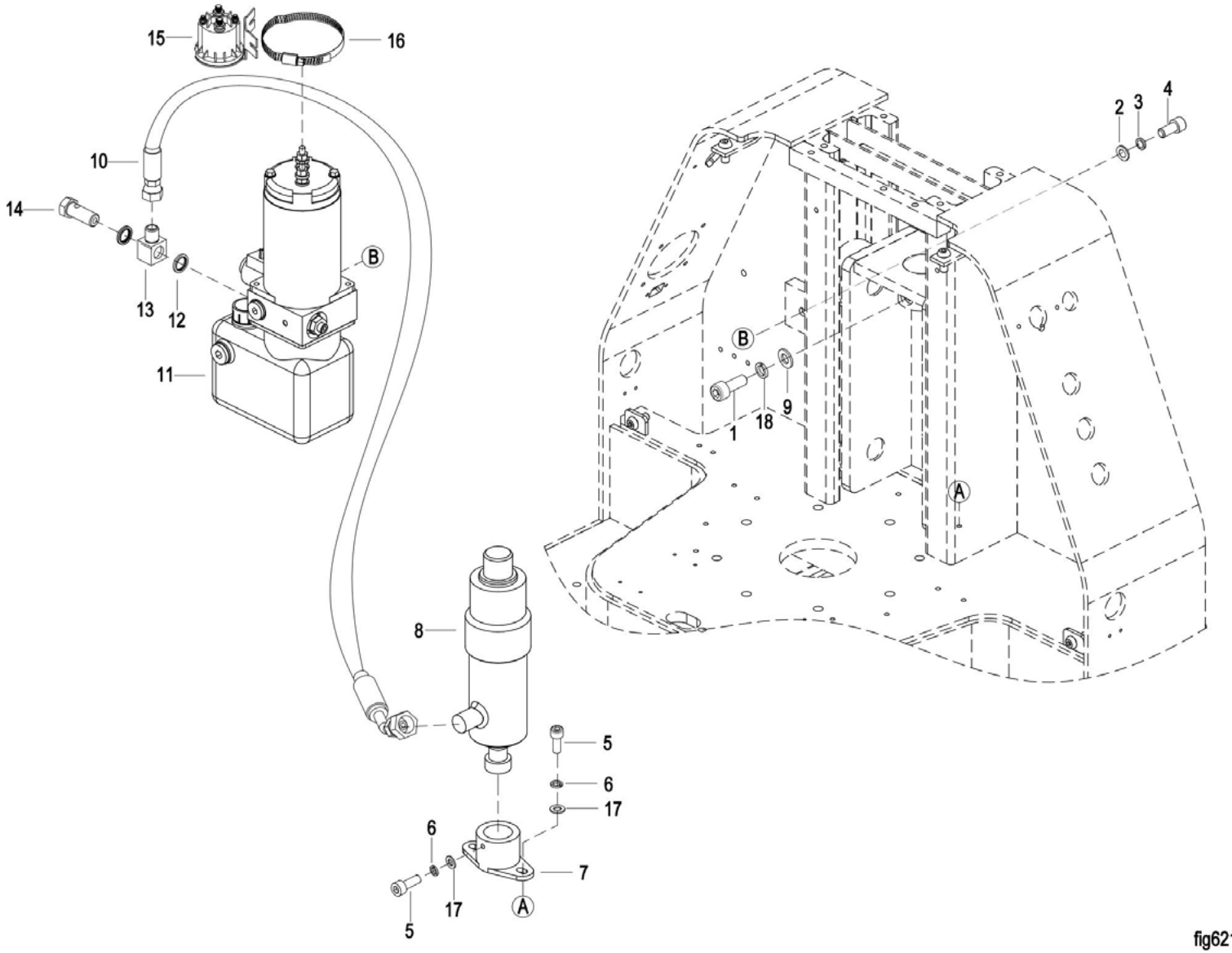

fig6210002100

0401 Hydraulic System

1	302000000411	Screw M10*30	1		
2	0000-000176-00	Flatwasher M8	2		
3	0000-000159-00	Flatwasher ø8	2		
4	302000000299	Screw M8*20	2		
5	302001000107	Flatwasher	3		
6	0000-000056-00	Lockwasher Φ6	3		
7	8011-000020-00	Oil cylinder	1		
8	1154-410000-00	Lifting Cylinder	1		See 0402
9	304002000006	Flatwasher ø10	1		
10	3218-717000-00	Forward Hose	1		
11	1154-420000-20	Hydraulic station	1		See0403
12	306001000001	Flatwasher ϕ14	2		
13	2706-141400-00	Connector M14×1.5-M14×1.5	1		
14	2401-143500-00	Bolt M14×1.5×35	1		
15	2801-117000-00	contactor	1		
16	202800000219	Hose Clamps	1		
17	304002000004	Lockwasher ø6	3		
18	304003000006	Flatwasher Φ10	1		

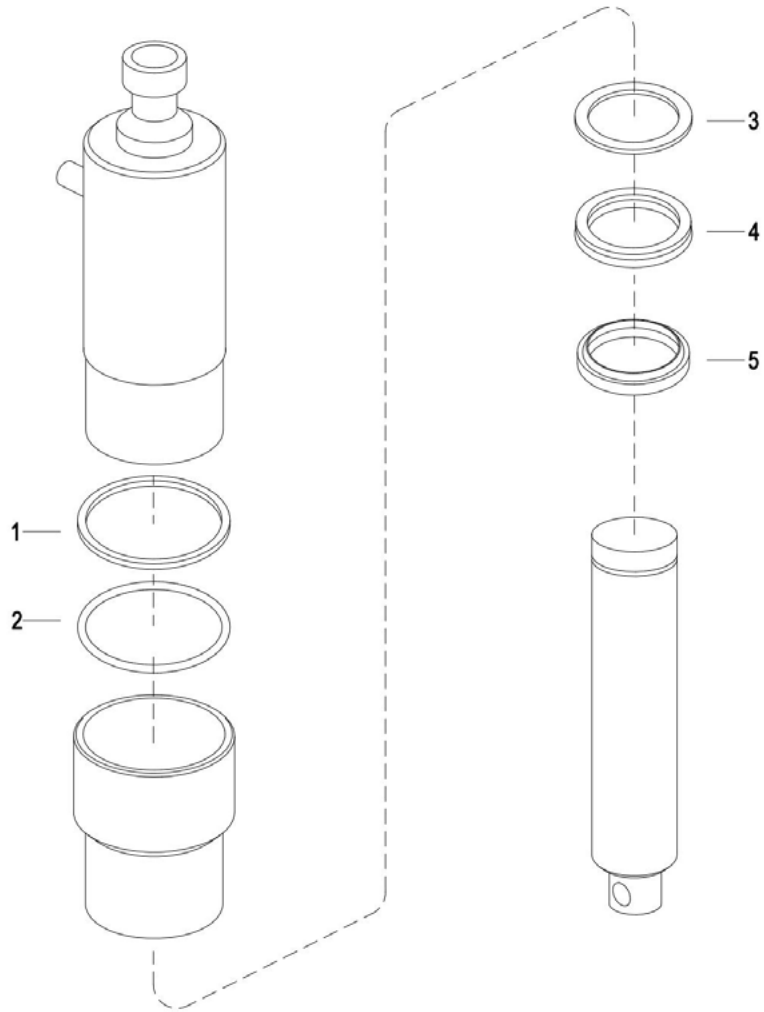

fig6220000600

0402 Lifting Cylinder

0	1154-QSYG-00	Seal Kit For Lifting Cylinder	1		
1	/	Rod Packing ø40×50×6	1		
2	/	Rod Packing ø40×50×6	1		
3	/	Rod Packing ø40×50×6	1		
4	/	Rod Packing ø40×50×6	1		
5	/	Rod Packing ø40×50×6	1		

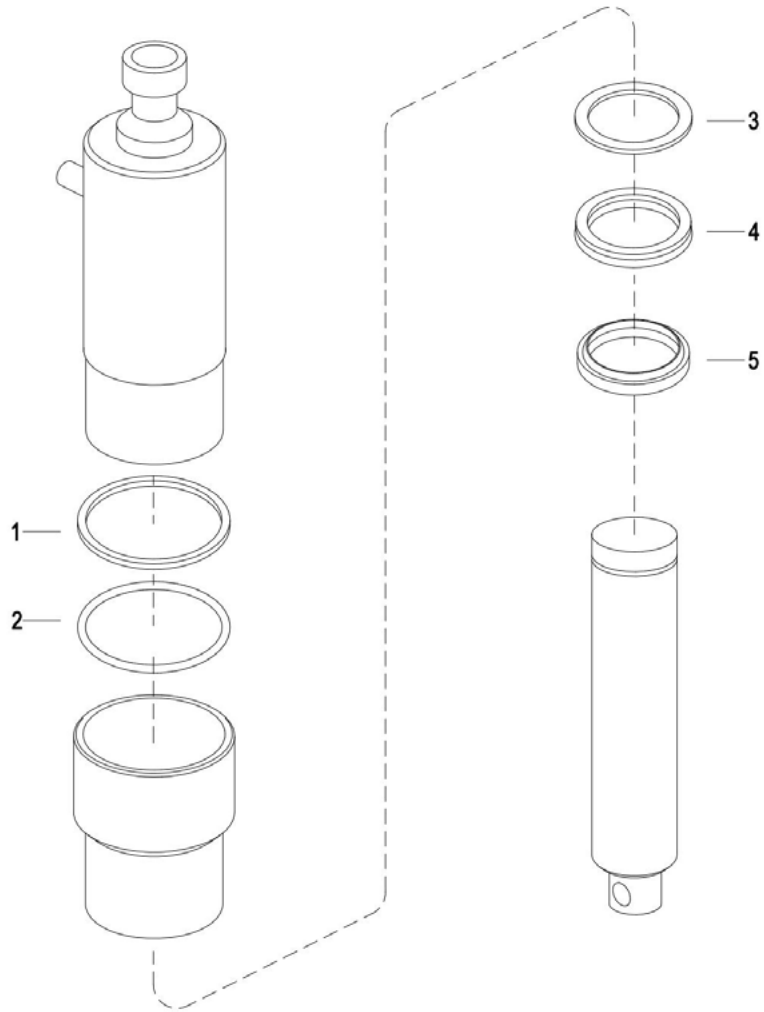

fig6220000600

0403 Pump & Motor Assembly

1	1114-42002X-B0	Motor	1		
2	1125-43001X-00	Screw M6×15	2		
3	1114-42003X-B0	coupling	1		
4	1114-42008X-B0	Relief valve	1		
5	1125-43002X-00	Valve Plate	1		
6	1125-43003X-00	Iron Plug	1		
7	1125-43004X-00	O-Ring ø67.95×2.62	1		
8	1125-43005X-00	O-Ring ø21.2×1.8	1		
9	1154-42001X-01	Gear Pumps	1		
10	1125-43006X-00	Screw	2		
11	1125-43007X-00	Suction Pipe	1		
12	1114-42013X-B0	Oil Filter	1		
13	1125-43008X-00	Screw	4		
14	1125-43009X-00	Tank	1		
15	1129-42002X-00	Vent ValveM16×1.5	1		
16	1114-42006X-B0	Valve	1		
17	1114-42004X-B0	Plug	1		
18	1114-42001X-B0	Coil	1		
19	1114-42015X-B0	Solenoid Valve （48V）	1		
20	1125-43012X-00	Unidirectional Valve	1		
21	1154-42002X-00	Hose Clamp	1		
22	1154-441002-00	Connector G3/8-8	1		
23	1154-441003-00	Pipe	1		
24	1154-441001-00	Connector G3/8-8.8	1		

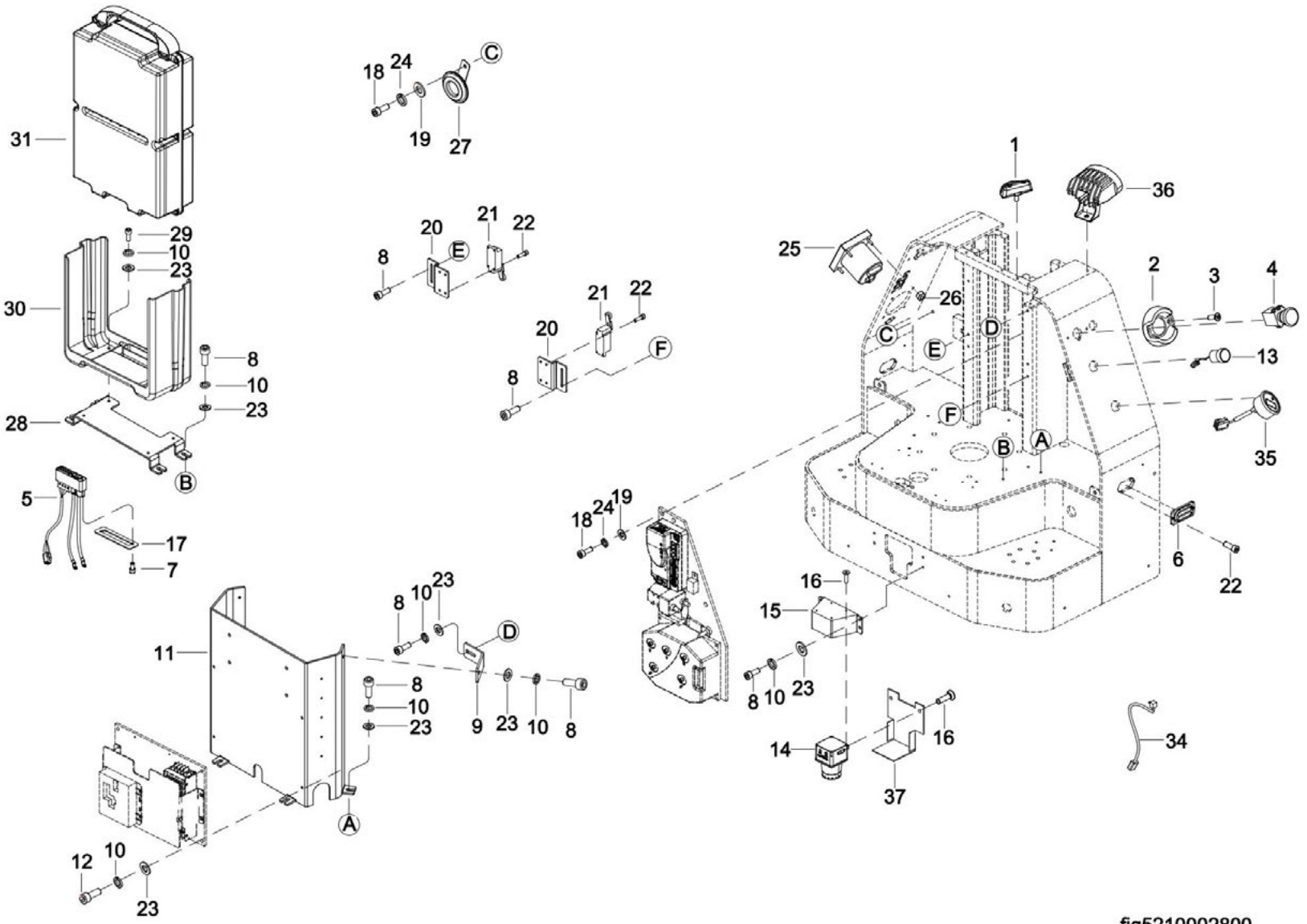

fig5210002800

0501 Electrical Assembly

1	1154-100100-00	Battery Plate	1		
2	1113-500007-E0	Bracket	2		
3	302001000012	Screw M5*10 Dacromet-8.8	4		
4	3218-604000-00	Emergency stop switch	2		
5	1154-50001X-A1	Plugger Assembly	1		For 24v
6	8011-500023-00	Steering Lamp	2		
7	302001000049	Screw M4*8	2		
8	202800000001	Screw M6*12	20		
9	8011-000008-00	Daan mounting plate fixing plate	2		
10	304003000004	Flat washer ø6	26		
11	8011-000007-00	Daan loading plate	1		
12	302001000110	Screw M6×16	4		
13	CK11-520012-0A	Button Assembly	1		
14	8011-711101-G0	LIDAR	1		
15	8011-711000-G0	Mounting Plate	1	Before Z332000001	
15	8011-719000-G0	Radar mounting plate	1	After Z332000001	
16	302000000534	Screw M3x8	6		
17	1155-140004-00	Battery Plate	1		
18	302001000106	Screw M8*16	4		
19	304002000005	Flatwasher ø8	4		
20	8011-000006-00	Limit switch mounting plate	2		
21	2125-500003-00	Micro Switch	2		
22	302000000617	Screw M5*12	12	After Z321500040	
22	302001000053	Screw M5*12	12	Before Z321500040	
23	304002000004	Lockwasher ø6	26		
24	304003000005	Lock washer ø8	4		
25	8011-500013-00	Voice module	1		
26	303001000002	NutM4	4		
27	1120-500003-00	Industrial Horn	1		
28	8011-000009-00	Battery mounting plate	1		

29	302001000054	Screw M6*10	2		
30	1154-50000Z-20	Battery base assembly EPL154	1		
31	LB83-00000Z-01	Li-ion Battery 24V60AH	1	Before Z321500018	24V60Ah
31	LB83-00000Z-06	Li-ion Battery 24V/60AH	1	After Z321500018	
32	304002000002	Flatwasher ø4	12		
33	304003000002	Flatwasher	12		
34	8011-900205-G0	Lower radar line	1		
35	1115-510006-50	Meter	1		
36	8011-903201-G0	Blue light assembly	1		optional
37	8011-711012-G0	Light shade	1	Z332000001-	

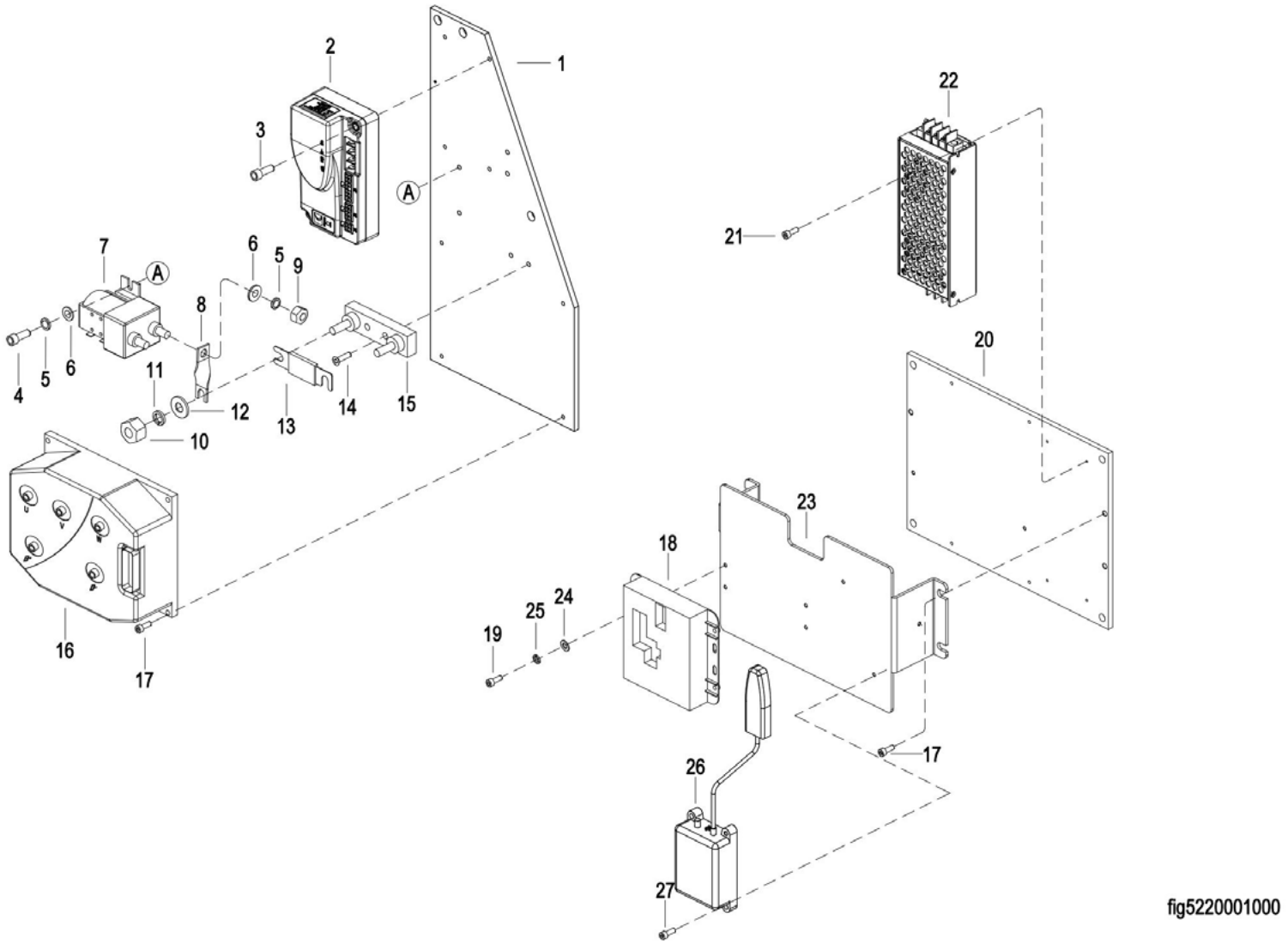

fig5220001000

0502 Controller Board Assembly

1	8011-000021-00	Aluminum plate I	1		
2	1223-510002-00-40	Controller	1	Before Z321500018	
2	1223-510002-00-80	controller1220E-2401	1	After Z321500018	
3	302000000217	Screw M5*30	2		
4	302001000054	Screw M6*10	2		
5	304003000004	Flat washer ø6	4		
6	304002000004	Lockwasher ø6	4		
7	1120-500005-10	Contactor	1		
8	1120-530006-00	Copper Conductor I	1		
9	303000000031	Nut M6	2		
10	303000000032	Nut M8	2		
11	304003000005	Lock washer ø8	2		
12	304002000005	Flatwasher ø8	2		
13	1120-540002-00	Fuse 200A	1		
14	302000000062	Screw M6x10	2		
15	1120-540001-00	Fuse Holder	1		
16	3218-600100-71-Y1	Controller	1	After Z321500018	
16	3218-600100-72-30	controller 1232E-2121	1	Before Z321500018	
17	302001000107	Flatwasher	7		
18	8011-621051-G0	Semi-automatic expansion board	1		
18	8011-904009-G0	Overseas Callbox Expansion Board	1	Z331600071-	Optional
19	302001000049	Screw M4*8	4		
20	8011-621001-G1	Industrial control machine mounting base plate	1		
21	302001000048	Screw M3*8 Dacromet-8.8	4		
22	8011-500016-00	power module	1		
23	8011-621002-G0	Upper board of industrial computer	1		
24	304002000002	Flatwasher ø4	4		
25	0000-000122-00	Flatwasher ø4	4		
26	1124-512000-00	Remote diagnosis client	1		
27	202800000106	Screw M5*20	2		

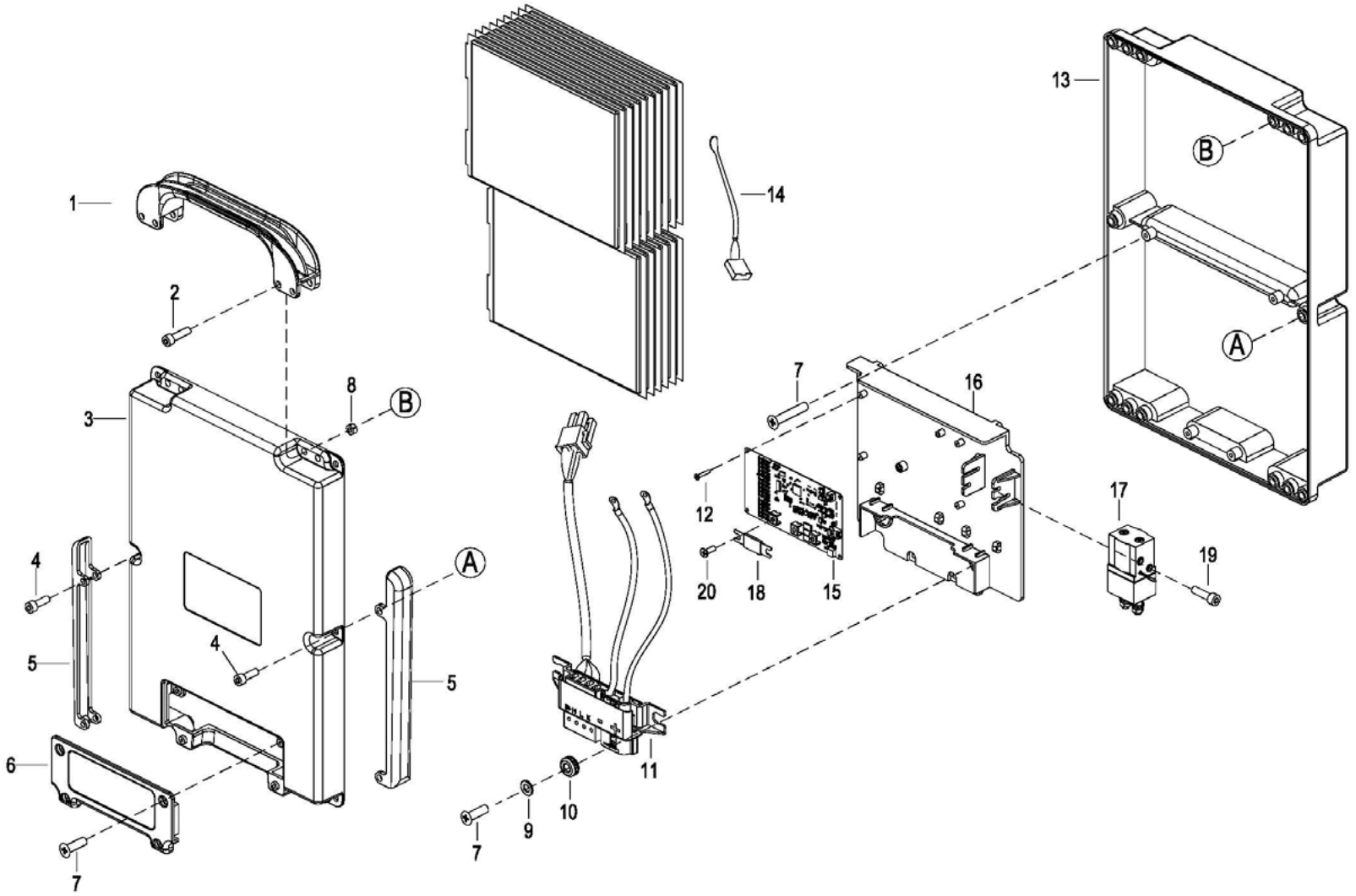
1
2
3
4
5
6
7
8
B
A
4
5
7
9
10
11
12
13
14
15
16
17
18
19
20
B
A

0503 Lithium Battery (S.N. before - Z321500017)

1	LB00-200242-00	Battery Handle	1	-Z321500017	
2	302001000020	Screw M6*35 Dacromet-8.8	4	-Z321500017	
3	LB00-200239-00	Battery Upper Cover	1	-Z321500017	
4	302000000295	Screw M6*30 Dacromet-8.8	1	-Z321500017	
5	LB00-200246-00	Guide Groove	2	-Z321500017	
6	LB00-200241-00	Plugger Cover	1	-Z321500017	
7	302000000296	Screw ST4.2*9.5	8	-Z321500017	
8	0000-000923-00	Nut M6	4	-Z321500017	
9	503070004564	Flatwasher	2	-Z321500017	
10	LB00-200245-00	Buckle	2	-Z321500017	
11	8011-50001X-00	Plugger Assembly	1	-Z321500017	
12	302023000001	Screw ST2.9*6	4	-Z321500017	
13	LB00-200240-00	Battery Lower Cover	1	-Z321500017	
14	LB00-200013-00	Temperature sensor	2	-Z321500017	
15	LB00-200283-00	BMS	1	-Z321500017	
16	LB00-200247-00	Bracket	1	-Z321500017	
17	1600-530012-00	Contactor	1	-Z321500017	
18	LB00-200269-00	Fuse	1	-Z321500017	
19	202800000016	Screw M4×10	2	-Z321500017	
20	202800000009	Washer M4*6	2	-Z321500017	

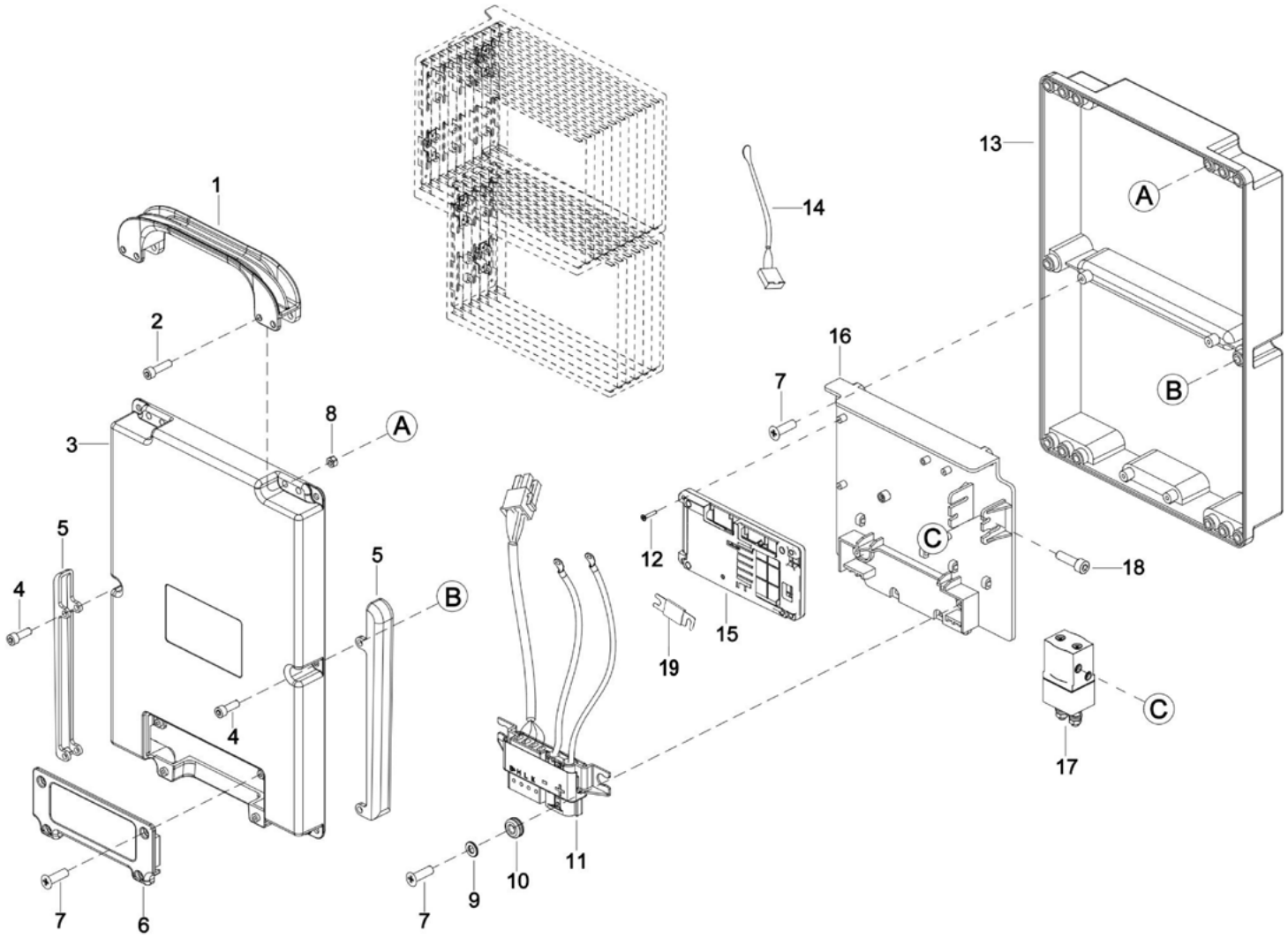
1
2
3
4
5
6
7
8
A
B
C
9
10
11
12
13
14
15
16
17
18
19

050301 Lithium Battery (S.N. after Z321500018-)

1	LB00-200242-00	Battery Handle	1	Z321500018-	
2	302001000020	Screw M6*35 Dacromet-8.8	4	Z321500018-	
3	LB00-200239-00	Battery Upper Cover	1	Z321500018-	
4	302000000295	Screw M6*30 Dacromet-8.8	1	Z321500018-	
5	LB00-200246-00	Guide Groove	2	Z321500018-	
6	LB00-200241-00	Plugger Cover	1	Z321500018-	
7	302000000296	Screw ST4.2*9.5	8	Z321500018-	
8	0000-000923-00	Nut M6	4	Z321500018-	
9	503070004564	Flatwasher	2	Z321500018-	
10	LB00-200245-00	Buckle	2	Z321500018-	
11	8011-50000X-00	Plugger Assembly	1	Z321500018-	
12	302023000001	Screw ST2.9*6	4	Z321500018-	
13	LB65-300005-00	Battery Lower Cover	1	Z321500018-	
14	LB00-200013-00	Temperature sensor	2	Z321500018-	
15	LB00-200545-00	BMS	1	Z321500018-	
16	LB00-200247-00	Bracket	1	Z321500018-	
17	1600-530012-00	Contactor	1	Z321500018-	
18	202800000016	Screw M4×10	2	Z321500018-	
19	LB00-200269-00-01	58V100A fuse	1		

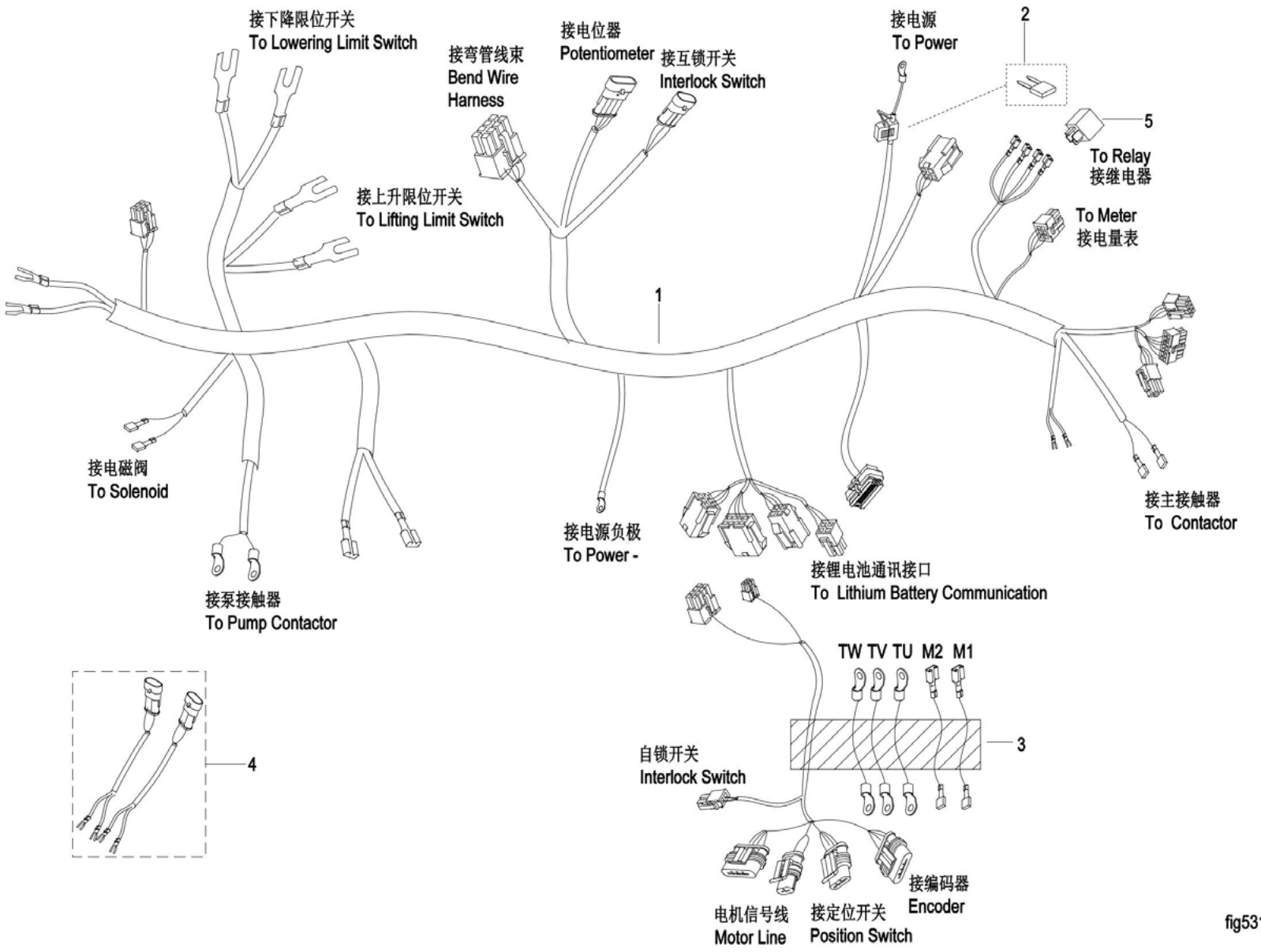

fig5310004601

0504 Wiring Harness 1

1	1221-521001-CE	Main Wire	1	After Z321500018 Before Z341200042	
1	1221-521001-W2	Mainline bundle	1	Before Z321500018	
1	8011-520002-00	Main harness	1	After Z341200042	
2	3218-690001-00	Fuse 10A	1		
3	1221-520014-CE	Driving wire harness	1	Before Z341200042	
3	1221-520014-W0	Driving wire harness	1	Before Z321500032	
3	8011-540001-00	Drive Cable Assembly	1	After Z341200042	
4	8011-520003-00	Switching harness	1	After Z341200042	
4	8011-900001-G0	Limit switch harness	1	Before Z341200042	
5	1113-500020-F0	Relay	1		

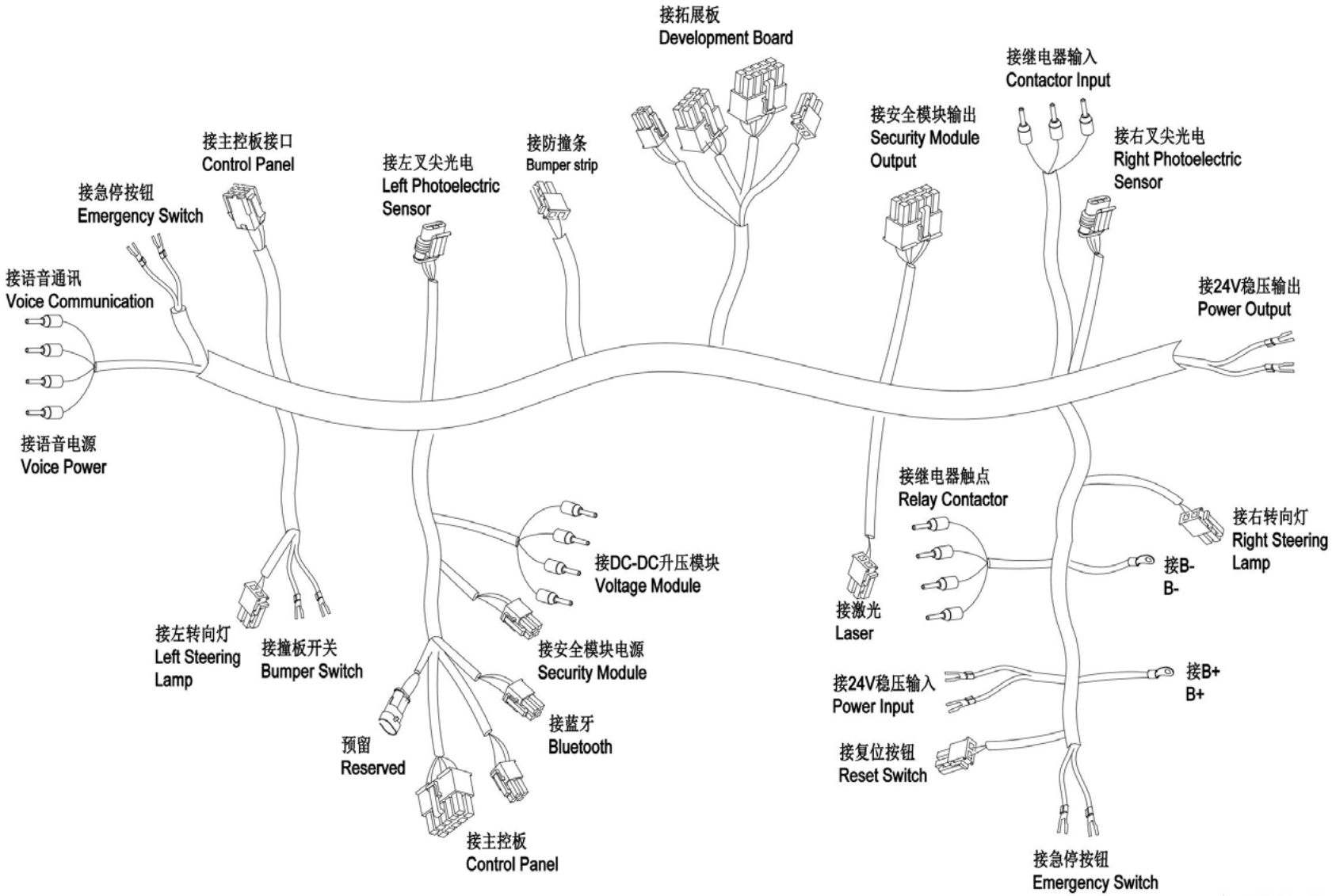

fig5310004700

0505 Wiring Harness 2

1	8011-520005-00	control harness	1	After Z341200042	
1	8011-900002-G0	Control harness	1	Before Z331600071	
1	8011-900002-G3	control harness	1	After Z331600071 Before Z341200042	

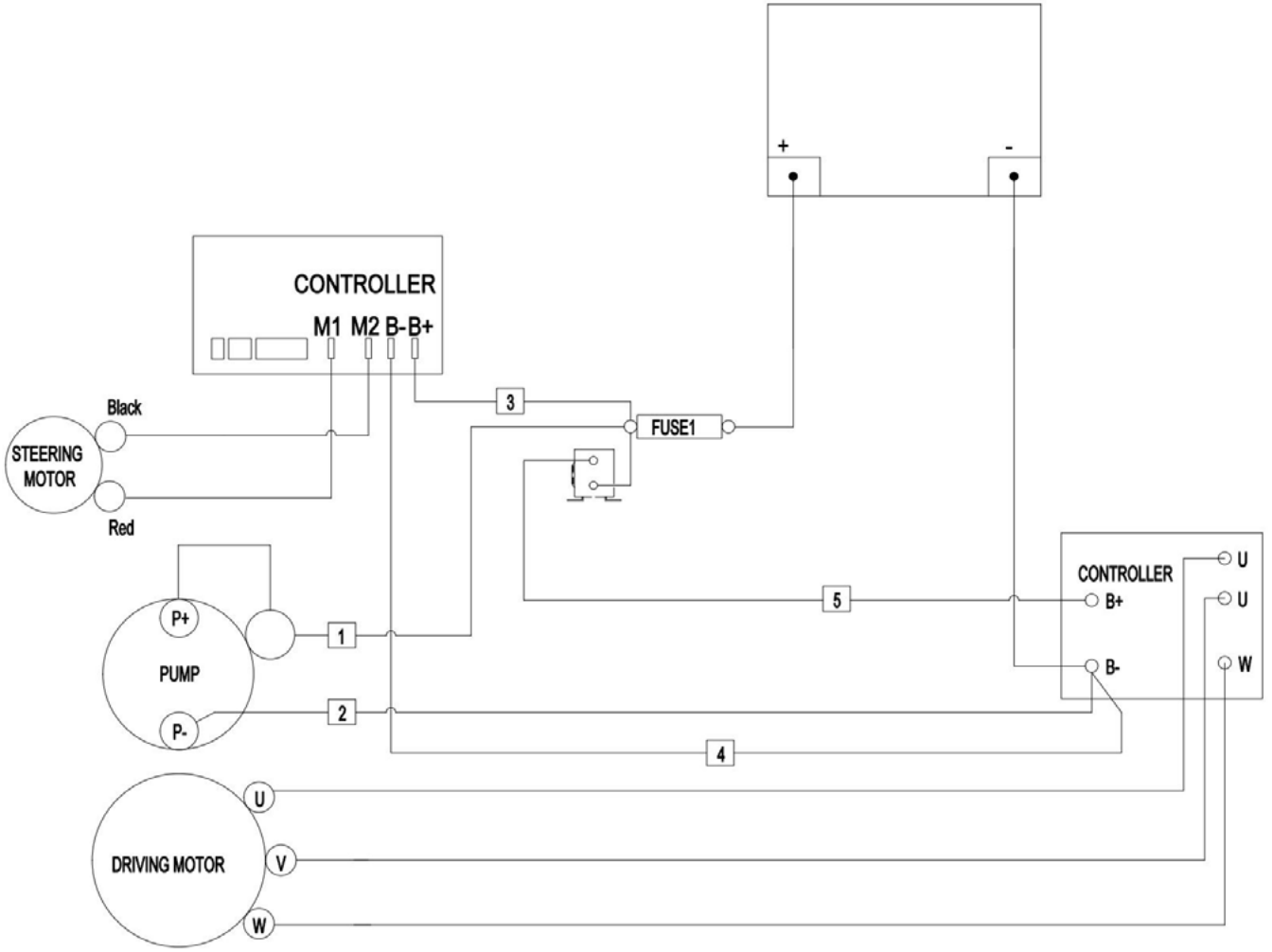

fig5320003900

0506 Cable Assembly

1	1221-530006-W0	Pump contactor positive cable	1	Before Z341200042	
1	8011-530004-00	Pump contactor positive cable	1	After Z341200042	
2	1221-530007-W0	Pump negative cable	1	Before Z341200042	
2	8011-530005-00	Pump Power Cable -	1	After Z341200042	
3	1221-530003-W0	Steering positive cable	1	Before Z341200042	
3	8011-530002-00	Steering positive cable	1	After Z341200042	
4	1221-530004-CE	Steering negative cable	1	After Z321500032 Before Z341200042	
4	1221-530004-W0	Steering negative cable	1	Before Z321500032	
4	8011-530003-00	Steering negative cable	1	After Z341200042	
5	1221-530005-CE	Controller positive cable	1	After Z321500032 Before Z341200042	
5	1221-530005-W0	Controller positive cable	1	Before Z321500032	
5	8011-530001-00	Controller positive cable	1	After Z341200042	

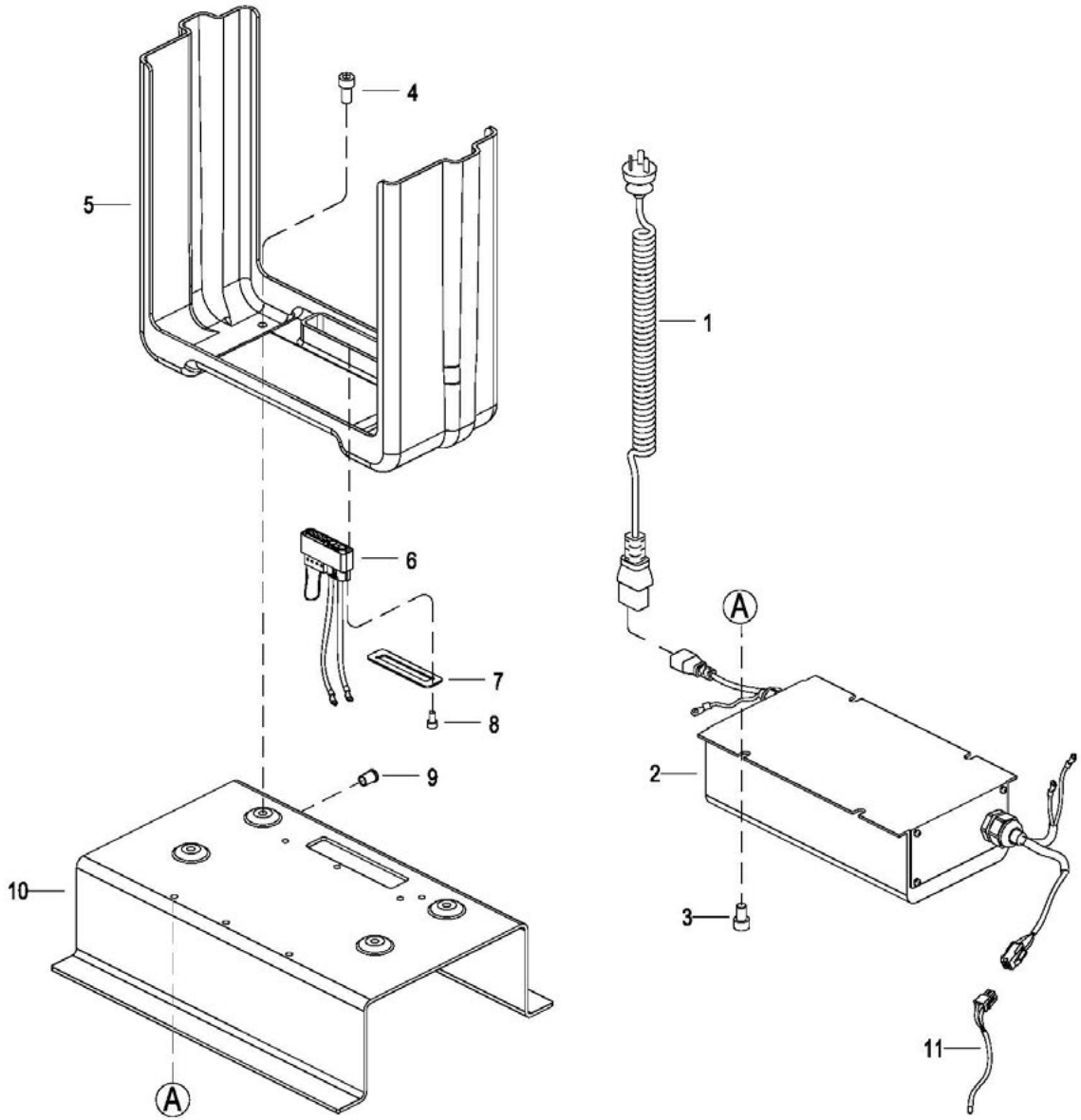
4
5
6
7
8
9
10
A
1
A
2
3
11

0507 Charger Assembly

0	8011-520000-00	charger assembly	1		Except Pos#1
1	1120-510002-00-16	Japanese-Spring Line-12A/C14	1		For JAPAN
1	1120-510002-00-17	Australian-Spring Line-10A/C14	1		For AUS
1	1120-510002-00-18	Charging spring wire	1		For USA
1	1120-510002-00-20	Swiss-Spring Line-10A/C14	1		For CH
1	1120-510002-00-21	English-Spring Line-13A/C14	1		For END
1	1120-510002-00-22	European-Spring Line-10A/C14	1		For EUROPE
1	1120-510002-00-23	Chinese-Spring Line-10A/C14	1		For CHINA
2	1154-501002-A1	24V-10A-Lion Charger-Internal（YN）	1		24V10A
3	302000000155	Screw M5×8	4		
4	302000000078	Screw M6x8	4		
5	1155-100010-00	Battery Base	1		
6	1154-50100X-00	Plugger Assembly	1		
7	1155-140004-00	Battery Plate	1		
8	302004000004	Screw M3*16	2		
9	1115-510009-00	Lamp Holder	1		
10	1155-032001-00	Charging Base	1		
11	1154-501005-A0	Wire	1		

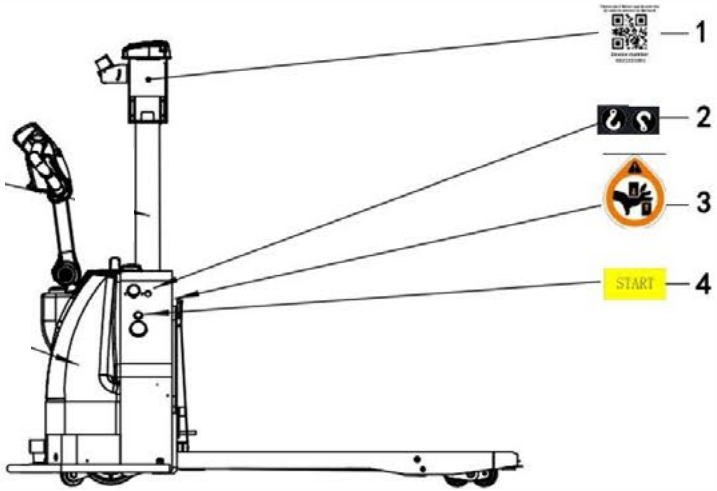
1
2
3
START
4

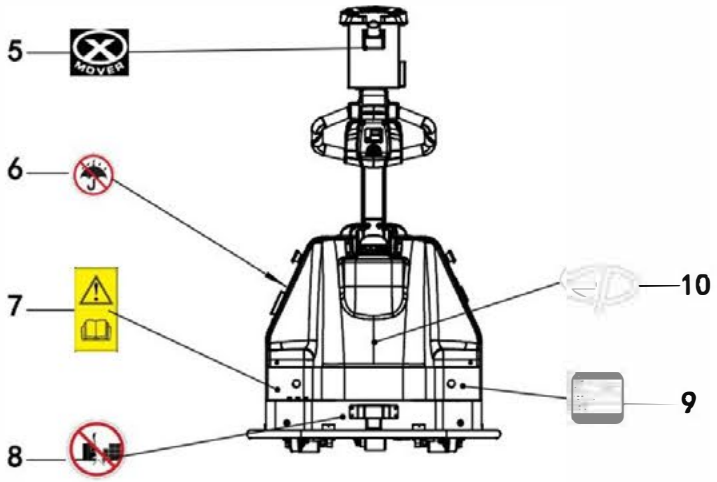
5
MOVER
6
7
8
10
9

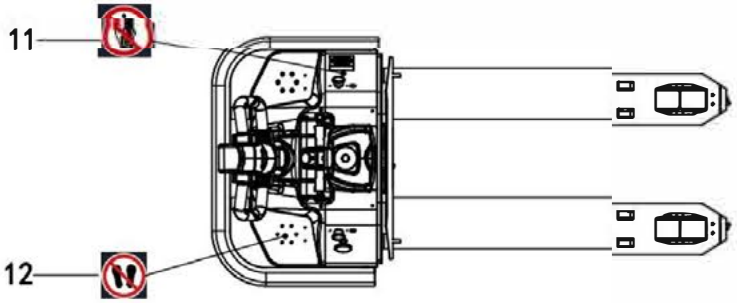
11
12

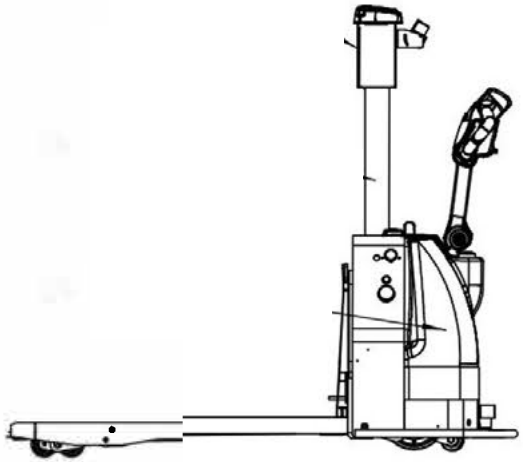

0901 Label

1	\	\	1		QR Code Label
2	508000000041	Label lifting label (one pair of left and right) 30mm*30mm	2		
3	508000000039	Label 40mm*47.5mm	1		
4	\	\	1		START Label
5	508000005043	AGV X-MOVE label 120*102mm	1		
6	508000003639	AGV waterproof warning label 55*55mm	1		
7	508000003809	Labels flip through the manual label 35*65mm	1		
8	508000003637	AGV anti-collision sticker 55*55mm	1		
9	508000001574	Zhongli Chinese Stickers	1		With EP，Chinese
9	508000001575	Neutral Chinese sticker for nameplate	1		Without EP，Chinese
9	508000001576	Nameplate Electric Carrying Chinese Force English Stickers	1		With EP，English
9	508000001577	The nameplate electric transfer neutral English self-adhesive sign	1		Without EP，English
10	508000000134	Label	1		
11	508000000070	No riding sticker	1		
12	508000000041	Label lifting label (one pair of left and right) 30mm*30mm	2		
13	508000000045	DECAL,EPLOGO	3		
14	508000000047	DECAL,EPEQUIPMENTLOGO	2		

0902 Special Accessories

1	1124-512000-00	Remote diagnosis client	1	Before Z331200059	
1	2YL063000000	remote system	1	After Z331200059	
2	8011-500060-G0	Mobile phone	1		
3	8011-791001-G0	Network Interface Cover	1		
4	8011-900207-G0	Public-public data line	1		
5	8011-900208-G0	Sd card	1		
6	8011-900209-G0	Rings	2		
7	8011-900210-G0	Labeling Tooling	1		
8	8011-900211-G0	Data adapter module	1		
9	8011-900301-G0	Reflective film	300		
10	8011-903107-G0	Carbon fiber tube	1		
11	8011-900401-G0	Button Keyboard	1		
12	8011-90030X-G0	Reflective wrap	1		Including 300 pcs. #8011-900301-G0
13	8011-900212-G0	Tape	2		
14	8011-904008-G0	call box(Frequency:868)	1		
15	8011-904012-G0	Butt plate	1		

SHS
HANDLING SOLUTIONS

0800 619 0800
SALES@SHS-HANDLING.COM

SHSHANDLING SOLUTIONS .COM

SHS HANDLING SOLUTIONS LTD, ELEVATION HOUSE, UNIT C,
TINGEWICK ROAD INDUSTRIAL PARK, BUCKINGHAM, MK18 1SU